REDUCE WASHDOWN WATER USAGE BY 50%

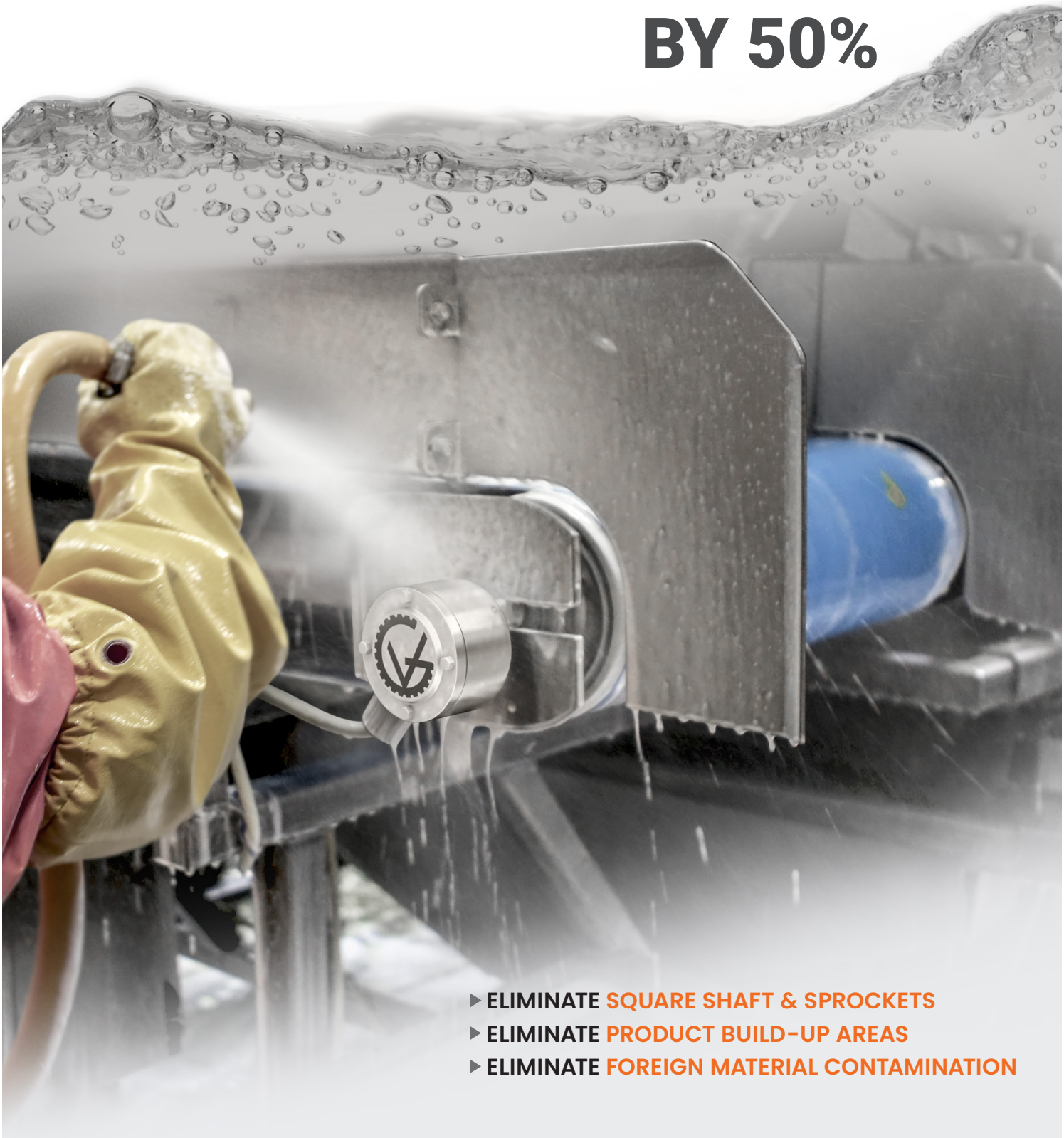

- ELIMINATE SQUARE SHAFT & SPROCKETS
- ELIMINATE PRODUCT BUILD-UP AREAS
- ELIMINATE FOREIGN MATERIAL CONTAMINATION

1-888-326-1476 | info@vandergraaf.com | www.vandergraaf.com

Made In USA

VDG Van der Graaf

SSV™ Drum Motor

Made In USA

The SSV™ Drum Motor with the belt profile machined directly onto the 316-stainless steel drive drum, drives modular, wire mesh, and monolithic thermoplastic conveyor belts without using sprockets, reducing water and time used for washdown by 50%.

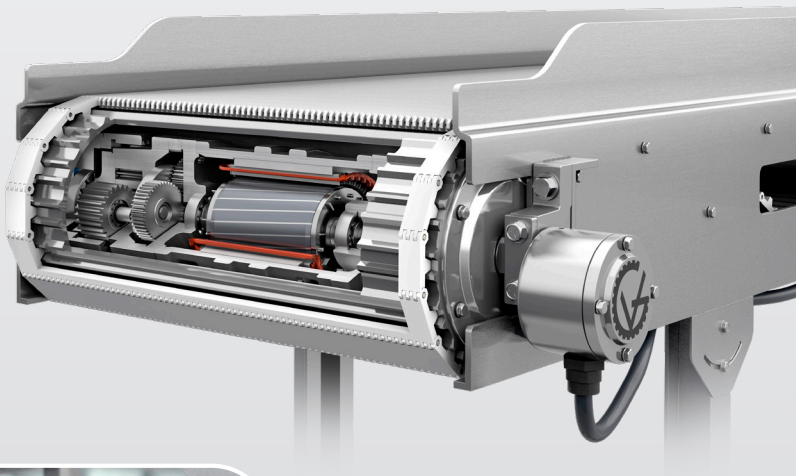

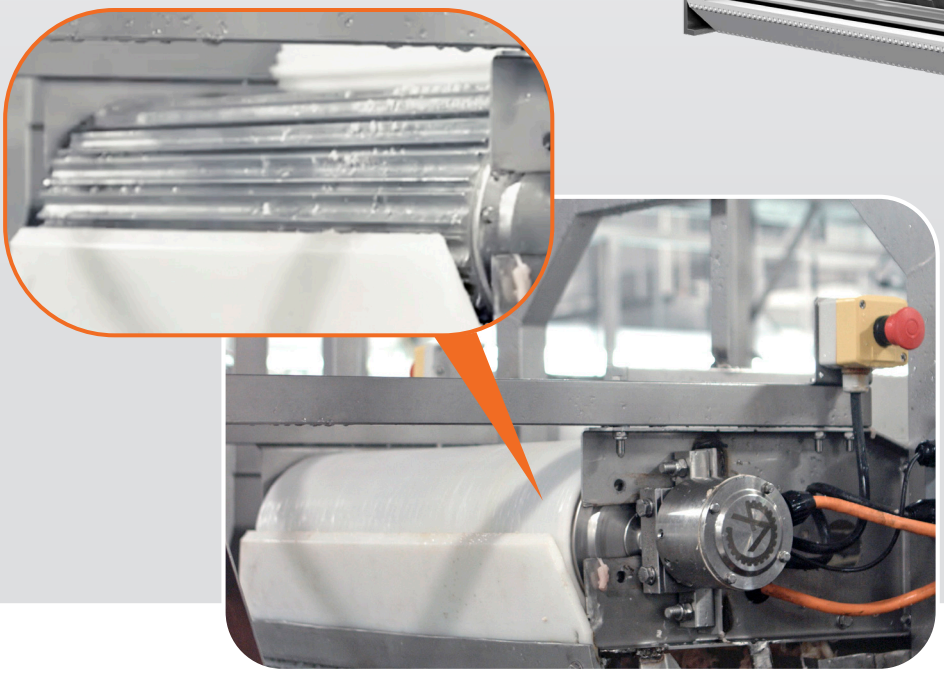

- All components are enclosed inside the drive drum and designed for 80,000 hours of operation before maintenance.
- IP69K-rated sealing system withstands washdown pressure up to 3,000 psi.
- Eliminates byproduct build-up areas reducing the amount of water and time for washdown.

Traditional External Motor & Gearbox Drive

- Requires maintenance intervals, and wear parts replacement, increasing maintenance and operational costs.
- Square shaft with sprockets have gaps and crevices where food byproducts buildup and harbor bacteria.
- Sprockets on a square shaft trap byproducts, require more time to clean, and use high volumes of water.

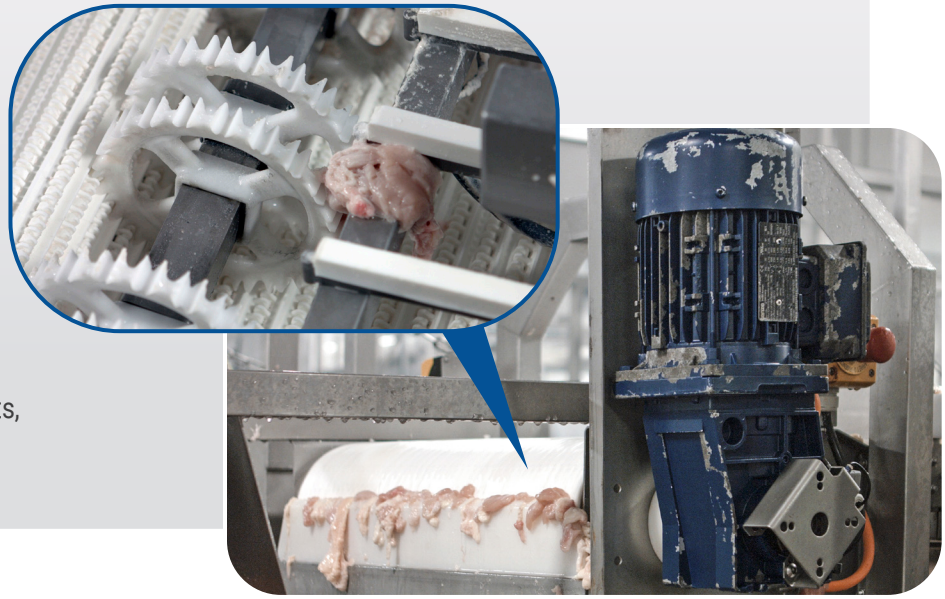

1-888-326-1476 | info@vandergraaf.com | www.vandergraaf.com

503-03 (10/2022) ©Van der Graaf Inc. All Rights Reserved.