SSV™ SERIES DRUM MOTORS | TM100 - TM215

ø4.0" to ø8.5" diameter • 0.11 to 7.5 hp

- *Dimensions and Specifications*
- *Design Features and Benefits*
- *Belt Pull Calculations*

BELT PULL (BP) = (F0 + F1 + F2)

Roller Bed Conveyor	Slider Bed Conveyor
F0 = 0.04 (2P + Q) L	F0 = 1.1 x P x L x C
F1 = 0.04 x R x L	F1 = 1.1 x R x L x C
F2 = R X H	F2 = R x H

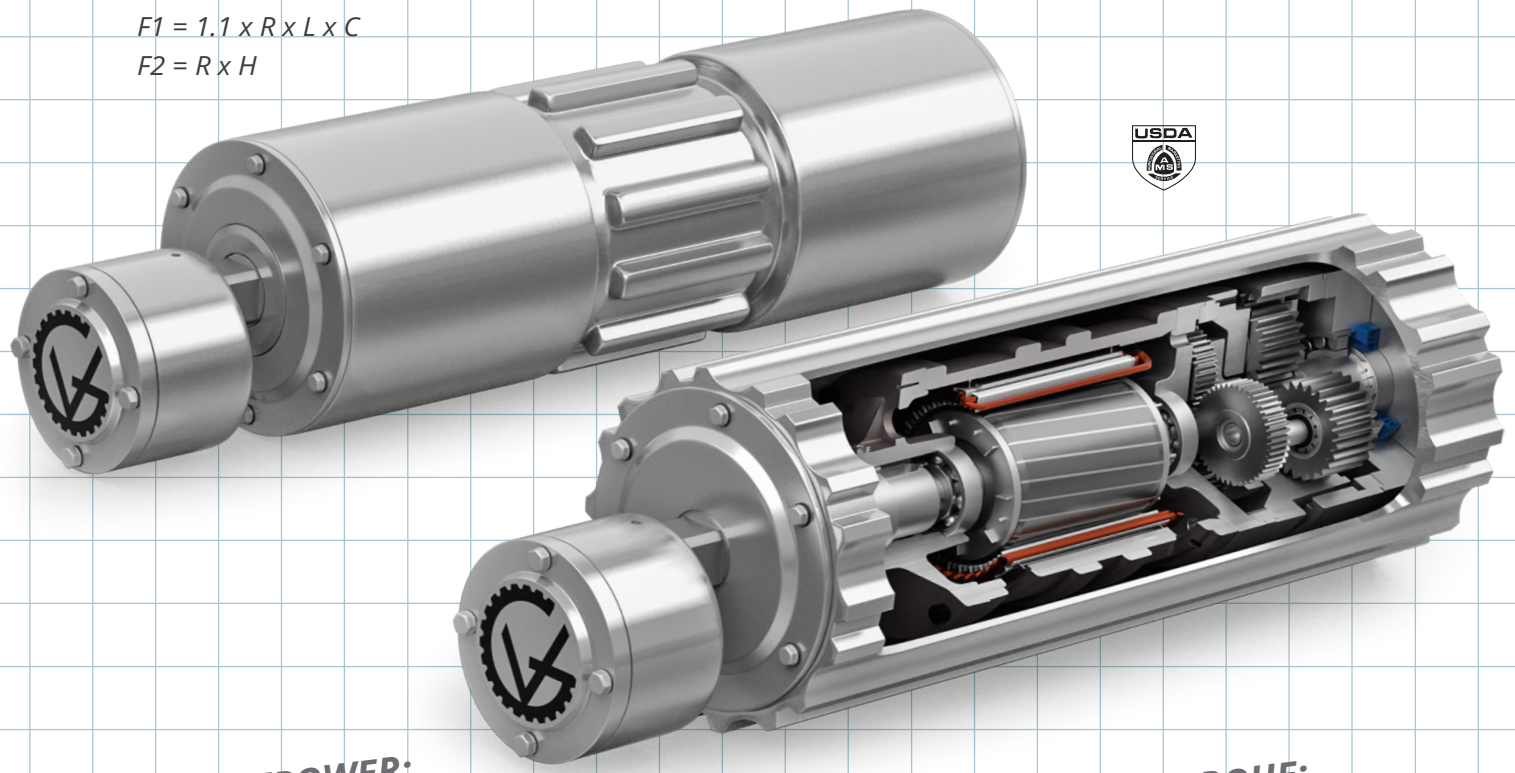

USDA

RPM:

$$= \frac{V}{\Pi\,(d/12)}$$

V = Velocity (ft/min)

HORSEPOWER:

$$HP = \frac{T"lbs. \times RPM}{63025}$$

TORQUE:

$$T"lbs. = \frac{63025 \times HP}{RPM}$$

Made In USA

TABLE OF CONTENTS

The SSV™ Series Drum Motors *1-2*

Design Benefits *1*

Standard Features & Options *2*

Technical Information: *3-18*

Drum Motor		*Dimensions*	*Specifications*
TM100B25	*(4.0 ø, 0.25 - 0.11 hp)*	*3*	*4-5*
TM113B25	*(4.5"ø, 0.75 - 0.16 hp)*	*6*	*7-8*
TM127B30	*(5.0"ø, 1.5 - 0.25 hp)*	*9*	*10*
TM138B30	*(5.4"ø, 1.5 - 0.25 hp)*	*11*	*12*
TM160B40	*(6.5"ø, 3.0 - 1.0 hp)*	*13*	*14*
TM215B40	*(8.5"ø, 7.5 - 2.0 hp)*	*15*	*16*
TM215B50	*(8.5"ø, 7.5 - 2.0 hp)*	*17*	*18*

Belt Profile Chart (TM100 - TM215 Series) *19-20*

Minimum Face Width Chart (TM100 - TM215 Series) *21*

Belt Pull Calculations *22*

SSV™ SERIES DRUM MOTORS: DESIGN BENEFITS

The SSV™ Series Drum Motor is constructed of 316-stainless steel and designed for hygienic belt conveyor applications where food safety is paramount. The drum motor is a one-component belt drive with all components enclosed inside the drive drum, protected from outside elements. With no external components such as motor, gearbox, and bearings, the drum motor improves hygiene and workforce safety and eliminates routine maintenance, reducing downtime and costs associated with traditional conveyor belt drives.

All components of the drum motor are designed for 80,000 hours of continuous operation before maintenance. The 96% mechanically efficient gear reducer is in-line with the premium-efficiency (IE4) electric motor, increasing energy efficiency by 25% to 30%, resulting in lower energy consumption and costs.

To drive conveyors with modular, wire mesh, or monolithic thermoplastic belts, SSV™ Series Drum Motors are available with either the belt profile machined directly onto its drive drum, the belt profile machined onto a removable drive sleeve, or with CleanFlow™ Sprockets. This eliminates crevices, bacterial harborage, and byproduct buildup areas, increasing hygiene and reducing water and time used for washdown by 50%.

The SSV™ Series Drum Motor is a hygienic, space-saving, efficient, reliable, and maintenance-free solution to power belt conveyors. Available in a wide range of diameters, belt speeds, horsepower, face widths, and options to suit all types of belt conveyor applications.

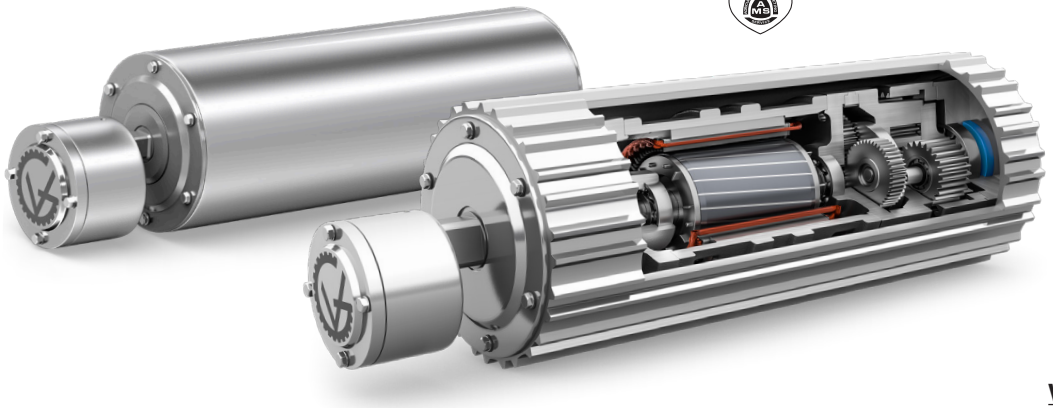

View Video

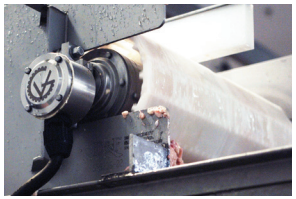







INCREASE HYGIENE

316-stainless steel SSV™ Drum Motors feature an IP69K-rated sealing system, withstand pressure washdown up to 3,000 psi, eliminate harborage areas, and reduce contamination.

REDUCE ENERGY CONSUMPTION

With 96% mechanical efficiency and a premium-efficiency (IE4) electric motor, SSV™ Drum Motors reduce energy consumption, resulting in energy savings of 25% to 30% over traditional external conveyor drives.

ELIMINATE ROUTINE MAINTENANCE

Maintenance-free SSV™ Drum Motors are designed for 80,000 hours of continuous operation before an oil change that is performed without removing the drive. With no external drive components, the drum motor eliminates the constant need for lubricating bearings, chain adjustment, and routine maintenance.

INCREASE WORKFORCE SAFETY

With all components enclosed inside the drive drum, SSV™ Drum Motors eliminate external drive components that could pose hazards to workforce safety.

OPTIMIZE SPACE UTILIZATION

Low-profile SSV™ Drum Motors reduce the overall footprint of the conveyor (area the conveyor occupies), allowing more conveyors to fit on the same floor or overhead space.

 ©Van der Graaf Inc. All Rights Reserved. Van der Graaf Inc. holds the rights on modifying the designs and its specifications and others noted here. E&OE.

STANDARD FEATURES:

ELECTRIC MOTOR

All electric motors are manufactured in-house by VDG to Class H insulation standards, are inverter-duty, and can be supplied for all standard and non-standard voltage at 50 Hz or 60 Hz for 3 phase applications. All electric motors are premium-efficiency (IE4) and undergo a **Vacuum Pressure Impregnation** (VPI) process, increasing the life of the electric motor.

PRESSURE EQUALIZATION SYSTEM (PES)

Depending on the application, the heat generated by the electric motor and gear reducer during normal operation will raise the internal pressure up to 18 psi. The internal pressure will cause tighter than normal engagement of the oil seals to the shaft, resulting in premature oil seal failure. The increased internal pressure will result in oil leakage and a higher operating temperature. The pressure equalization system (PES) releases the internal pressure above 0.5 psi. Lower internal pressure eliminates oil leaks, reduces the operating temperature, and increases the electric motor and gear reducer performance.

IP69K SEALING SYSTEM

Withstands pressure washdown up to 3,000 psi

OPTIONS:

NON-STANDARD LENGTH / EXTRA LONG FACE WIDTH - Contact your VDG technical representative for details.

MECHANICAL BACKSTOP (TB)

To prevent rollback for incline conveyors, the backstop device in the drum motor allows the drum motor to rotate only in one direction.

ELECTROMAGNETIC BRAKE (RTM)

The mechanical electromagnetic brake inside the drum motor allows the drum motor to start and stop 45 times per minute. Available for TM127 and higher.

OVERLOAD PROTECTION (GV-THERM)

The GV-THERM, a thermal bimetal device embedded into the motor windings that reacts to temperature, provides an additional layer of thermal overload protection.

LAGGING

VDG offers a complete line of USDA approved white or blue nitrile rubber lagging.

BELT PROFILES

SSV™ Drum Motors are available with **Continuous Belt Profiles** or **CleanFlow™ Sprockets**. Belt profiles are available for various belt manufacturers, including Intralox, Wire Belt, Habasit, Gates, Cambridge, and Volta.

CONTINUOUS BELT PROFILES

The belt profile is machined directly onto the drive drum or on a removable Profiled Drive Sleeve to drive conveyor belts without using sprockets. It eliminates crevices and byproduct buildup, minimizing contamination. With the continuous profile, the conveyor belt maintains full contact across the width of the drive, resulting in higher traction, and more uniform load transmission.



The Profiled Drive Sleeve allows the flexibility to use the same drum motor for different processing applications. The sleeve can be easily removed and exchanged for another profiled sleeve to match the belt required on the conveyor. This VDG patented design is only available for TM127 and TM160 SSV™ Series Drum Motors.

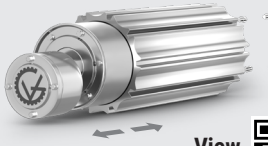

View Demo

CLEANFLOW™ SPROCKETS

CleanFlow™ Sprockets feature flow-through geometry, smooth surfaces, and open architecture, allowing complete debris and byproduct removal during high-pressure washdown. It is completely self-draining and enables rapid drying. It eliminates crevices and byproduct buildup areas, minimizing contamination.

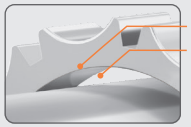

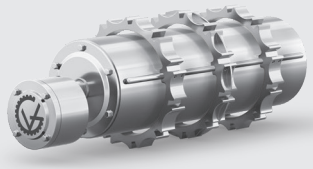

 ©Van der Graaf Inc. All Rights Reserved. Van der Graaf Inc. holds the rights on modifying the designs and its specifications and others noted here. E&OE.

TM100B25 Drum Motor *(matching Idler KT100B25**)*

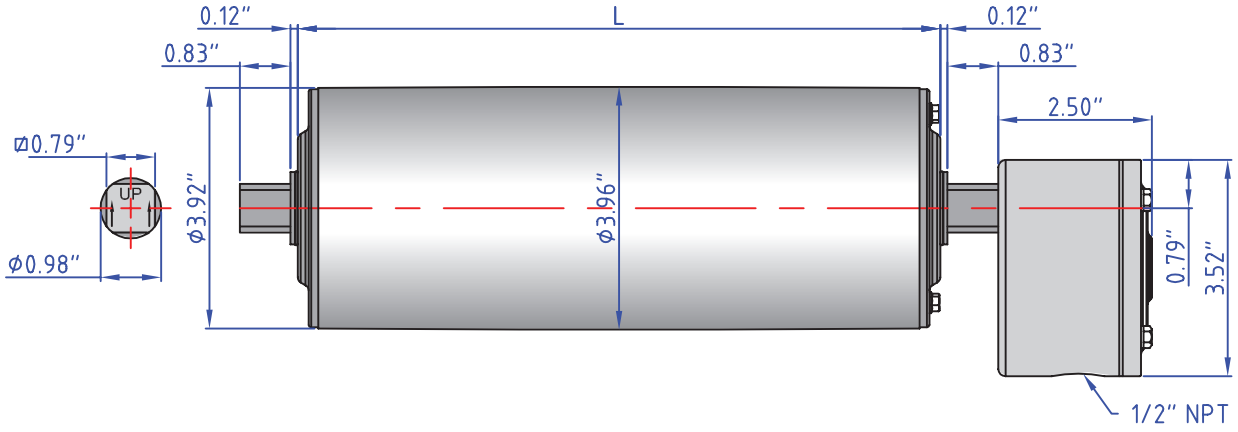

Standard drum motor face widths* (L) in inches:

10.24	10.83	12.20	14.17	16.14	18.11	20.08	22.05	24.02	25.98
27.95	29.92	31.89	33.86	35.83	37.80	39.76	41.73	43.70	45.67

**Some face widths are not available in all horsepowers. For minimum available face widths refer to page 21.*
***Idler dimensions are identical to the drum motor with no junction box.*

Brackets: 100-AB20

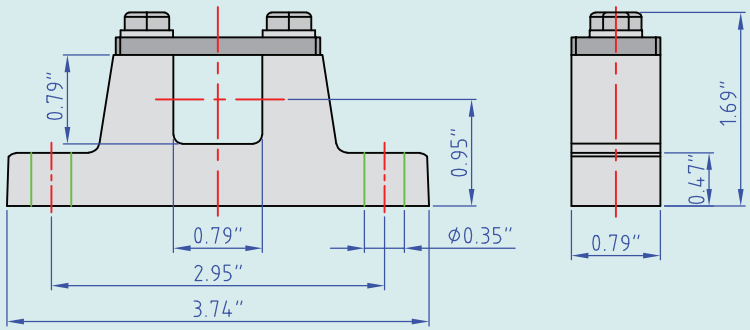

Cable Option:

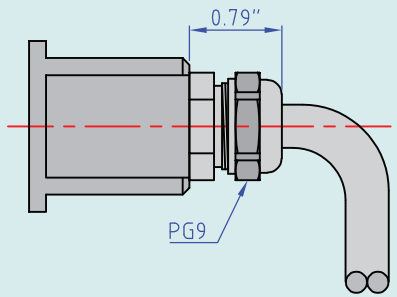

 ©Van der Graaf Inc. All Rights Reserved. Van der Graaf Inc. holds the rights on modifying the designs and its specifications and others noted here. E&OE.

TM100B25 Drum Motor

0.25 HP

V *(ft/min)* **M/G**	409 4/S2	327 4/S2	291 4/S2	258 4/S2	227 4/S2	199 4/S2	177 4/PL2	157 4/PL2	149 4/PL2	132 4/PL2	111 4/PL2	106 4/PL2	93 4/PL2	83 4/PL2	69 4/PL2
Belt Pull *(lbf)*	20	25	28	32	36	41	47	52	55	63	74	78	88	100	119
Drum *RPM*	397	317	282	250	220	193	172	152	145	128	108	103	90	81	67

V *(ft/min)* **M/G**	56 4/PL2	44 4/PL3	37 4/PL3	33 4/PL3	27 4/PL3	23 4/PL3	20 4/PL3	17 4/PL3	14 4/PL3
Belt Pull *(lbf)*	148	189	225	253	274	274	274	274	274
Drum *RPM*	54	43	36	32	26	22	19	17	14

0.16 HP

V *(ft/min)* **M/G**	258 4/S2	227 4/S2	199 4/S2	177 4/PL2	157 4/PL2	149 4/PL2	132 4/PL2	111 4/PL2	106 4/PL2	93 4/PL2	83 4/PL2	69 4/PL2	56 4/PL2	44 4/PL3	37 4/PL3
Belt Pull *(lbf)*	20	23	27	30	34	35	40	48	50	57	64	76	94	121	144
Drum *RPM*	250	220	193	172	152	145	128	108	103	90	81	67	54	43	36

V *(ft/min)* **M/G**	33 4/PL3	27 4/PL3	23 4/PL3	20 4/PL3	17 4/PL3	14 4/PL3
Belt Pull *(lbf)*	162	193	230	259	274	274
Drum *RPM*	32	26	22	19	17	14

0.16 HP

V *(ft/min)* **M/G**	305 6/S2	273 6/S2	218 6/S2	194 6/S2	172 6/S2	152 6/S2	105 6/PL2	99 6/PL2	88 6/PL2	74 6/PL2	71 6/PL2	62 6/PL2	55 6/PL2	46 6/PL2	37 6/PL2
Belt Pull *(lbf)*	17	19	24	27	31	35	50	53	60	71	74	85	96	114	142
Drum *RPM*	296	265	212	188	167	148	102	96	85	72	69	60	53	45	36

V *(ft/min)* **M/G**	29 6/PL3	24 6/PL3	22 6/PL3	18 6/PL3	15 6/PL3	13 6/PL3	11 6/PL3	9 6/PL3
Belt Pull *(lbf)*	181	216	243	274	274	274	274	274
Drum *RPM*	28	23	21	17	15	13	11	9

0.14 HP

V *(ft/min)* **M/G**	258 4/S2	227 4/S2	199 4/S2	177 4/PL2	157 4/PL2	149 4/PL2	1332 4/PL2	111 4/PL2	106 4/PL2	93 4/PL2	83 4/PL2	69 4/PL2	56 4/PL2	44 4/PL3	37 4/PL3
Belt Pull *(lbf)*	18	20	23	26	29	31	35	42	42	50	56	67	83	106	126
Drum *RPM*	250	220	193	172	152	145	128	108	103	90	81	67	54	43	36

V *(ft/min)* **M/G**	33 4/PL3	27 4/PL3	23 4/PL3	20 4/PL3	17 4/PL3	14 4/PL3
Belt Pull *(lbf)*	142	169	201	227	271	274
Drum *RPM*	32	26	22	19	17	14

V = Belt Speed (ft/min)

M/G = Motor/Gear Reducer Configuration (at rated horsepower)

High Speed Low Torque ◀ 2/S2 4/S2 6/S2 2/S3 4/S3 6/S3 2/PL2 4/PL2 6/PL2 2/PL3 4/PL3 6/PL3 ▶ *Low Speed High Torque*

 ©Van der Graaf Inc. All Rights Reserved. Van der Graaf Inc. holds the rights on modifying the designs and its specifications and others noted here. E&OE.

TM100B25 Drum Motor

0.11 HP

V *(ft/min)* **M/G**	194 6/S2	172 6/S2	151 6/S2	118 6/PL2	105 6/PL2	99 6/PL2	88 6/PL2	74 6/PL2	71 6/PL2	62 6/PL2	55 6/PL2	46 6/PL2	37 6/PL2	29 6/PL3	24 6/PL3
Belt Pull *(lbf)*	19	21	24	31	35	36	41	49	51	58	66	79	97	125	148
Drum *RPM*	188	167	147	115	102	96	85	72	69	60	53	45	36	28	23

V *(ft/min)* **M/G**	22 6/PL3	18 6/PL3	15 6/PL3	13 6/PL3	11 6/PL3	9 6/PL3
Belt Pull *(lbf)*	167	200	237	267	274	274
Drum *RPM*	21	17	15	13	11	9

V = Belt Speed (ft/min)

M/G = Motor/Gear Reducer Configuration (at rated horsepower)

High Speed Low Torque — 2/S2 4/S2 6/S2 2/S3 4/S3 6/S3 2/PL2 4/PL2 6/PL2 2/PL3 4/PL3 6/PL3 — *Low Speed High Torque*

 ©Van der Graaf Inc. All Rights Reserved. Van der Graaf Inc. holds the rights on modifying the designs and its specifications and others noted here. E&OE.

TM113B25 Drum Motor *(matching Idler KT113B25**)*

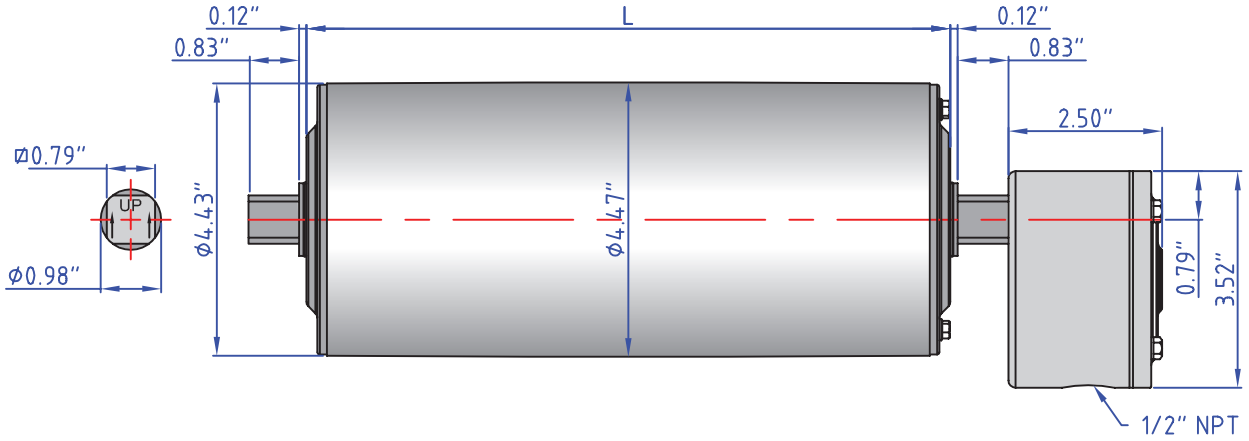

Standard drum motor face widths* (L) in inches:

10.24	10.83	12.20	14.17	16.14	18.11	20.08	22.05	24.02	25.98
27.95	29.92	31.89	33.86	35.83	37.80	39.76	41.73	43.70	45.67

**Some face widths are not available in all horsepowers. For minimum available face widths refer to page 21.*
***Idler dimensions are identical to the drum motor with no junction box.*

Brackets: 100-AB20

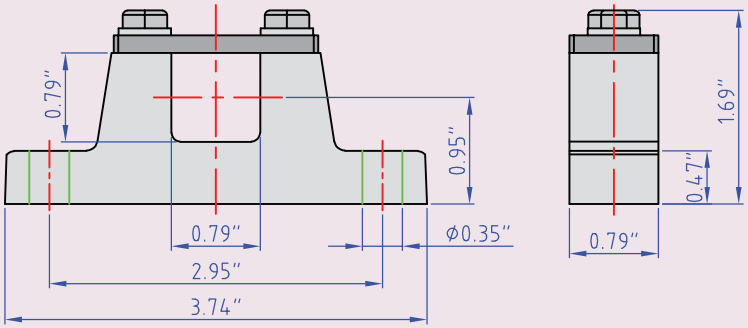

Cable Option:

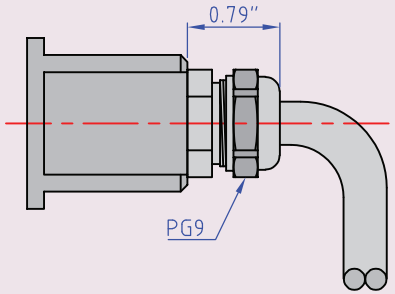

 ©Van der Graaf Inc. All Rights Reserved. Van der Graaf Inc. holds the rights on modifying the designs and its specifications and others noted here. E&OE.

TM113B25 Drum Motor

0.75 HP

V *(ft/min)* **M/G**	1039 2/S2	945 2/S2	756 2/S2	661 2/S2	591 2/S2	520 2/S2	449 2/S2
Belt Pull *(lbf)*	22	24	31	35	39	45	50
Drum *RPM*	892	811	649	568	507	446	385

0.5 HP

V *(ft/min)* **M/G**	1039 2/PL2	945 2/S2	756 2/S2	661 2/S2	591 2/S2
Belt Pull *(lbf)*	15	17	21	23	26
Drum *RPM*	892	881	649	568	507

0.5 HP

V *(ft/min)* **M/G**	520 4/S2	472 4/S2	378 4/S2	331 4/S2	295 4/S2	260 4/S2	224 4/S2	201 4/PL2	177 4/S2	165 4/PL2	154 4/PL2	142 4/S2	130 4/PL2	118 4/PL2	106 4/PL2
Belt Pull *(lbf)*	30	33	41	47	52	60	69	75	88	91	98	109	116	127	141
Drum *RPM*	446	406	325	284	254	223	193	172	152	142	132	122	112	101	91

V *(ft/min)* **M/G**	94 4/PL2	80 4/PL2	64 4/PL2
Belt Pull *(lbf)*	161	187	215
Drum *RPM*	81	69	55

0.34 HP

V *(ft/min)* **M/G**	1039 2/S2	945 2/S2	756 2/S2	661 2/S2	591 2/S2
Belt Pull *(lbf)*	10	11	14	16	18
Drum *RPM*	892	811	649	568	507

0.34 HP

V *(ft/min)* **M/G**	520 4/S2	472 4/S2	378 4/S2	331 4/S2	295 4/S2	260 4/S2	224 4/S2	201 4/PL2	177 4/PL2	165 4/PL2	154 4/PL2	130 4/PL2	118 4/PL2	106 4/PL2	94 4/PL2
Belt Pull *(lbf)*	21	22	28	32	36	40	47	50	57	62	66	79	86	95	108
Drum *RPM*	446	406	325	284	254	223	193	172	152	142	132	112	101	91	81

V *(ft/min)* **M/G**	80 4/PL2	64 4/PL2
Belt Pull *(lbf)*	126	159
Drum *RPM*	69	55

V = Belt Speed (ft/min)

M/G = Motor/Gear Reducer Configuration (at rated horsepower)

High Speed Low Torque ◀ 2/S2 | 4/S2 | 6/S2 | 2/S3 | 4/S3 | 6/S3 | 2/PL2 | 4/PL2 | 6/PL2 | 2/PL3 | 4/PL3 | 6/PL3 ▶ *Low Speed High Torque*

 ©Van der Graaf Inc. All Rights Reserved. Van der Graaf Inc. holds the rights on modifying the designs and its specifications and others noted here. E&OE.

TM113B25 Drum Motor

0.34 HP

V *(ft/min)* **M/G**	236 6/S2	213 6/S2	189 6/S2	165 6/S2	142 6/S2	118 6/S2	94 6/S2	69 6/PL2	59 6/PL2	50 6/PL2	40 6/PL2
Belt Pull *(lbf)*	45	50	55	64	74	89	111	149	172	205	215
Drum *RPM*	203	183	162	142	122	101	81	59	51	43	34

0.25 HP

V *(ft/min)* **M/G**	378 4/S2	331 4/S2	295 4/S2	260 4/S2	224 4/S2	201 4/PL2	177 4/PL2	165 4/PL2	154 4/PL2	130 4/PL2	118 4/PL2	106 4/PL2	94 4/PL2	80 4/PL2	64 4/PL2
Belt Pull *(lbf)*	20	22	25	29	34	36	41	44	48	56	62	69	78	91	115
Drum *RPM*	325	284	254	223	193	172	152	142	132	112	101	91	81	69	55

V *(ft/min)* **M/G**	47 4/PL3	43 4/PL3	38 4/PL3	31 4/PL3	26 4/PL3
Belt Pull *(lbf)*	148	165	185	215	215
Drum *RPM*	41	37	32	26	22

0.25 HP

V *(ft/min)* **M/G**	213 6/S2	189 6/S2	165 6/S2	142 6/S2	59 6/PL2	50 6/PL2	40 6/PL2
Belt Pull *(lbf)*	36	40	46	53	123	148	182
Drum *RPM*	183	162	142	122	51	43	34

0.16 HP

V *(ft/min)* **M/G**	260 4/S2	224 4/S2	201 4/PL2	177 4/PL2	165 4/PL2	154 4/PL2	130 4/PL2	118 4/PL2	106 4/PL2	94 4/PL2	80 4/PL2	64 4/PL2	43 4/PL3	26 4/PL3	17 4/PL3
Belt Pull *(lbf)*	20	22	24	27	30	32	37	41	46	51	61	77	109	180	215
Drum *RPM*	223	193	172	152	142	132	112	101	91	81	69	55	37	22	14

V = Belt Speed (ft/min)

M/G = Motor/Gear Reducer Configuration (at rated horsepower)

High Speed Low Torque ◀ 2/S2 | 4/S2 | 6/S2 | 2/S3 | 4/S3 | 6/S3 | 2/PL2 | 4/PL2 | 6/PL2 | 2/PL3 | 4/PL3 | 6/PL3 ▶ *Low Speed High Torque*

 ©Van der Graaf Inc. All Rights Reserved. Van der Graaf Inc. holds the rights on modifying the designs and its specifications and others noted here. E&OE.

TM127B30 Drum Motor *(matching Idler KT127B30**)*

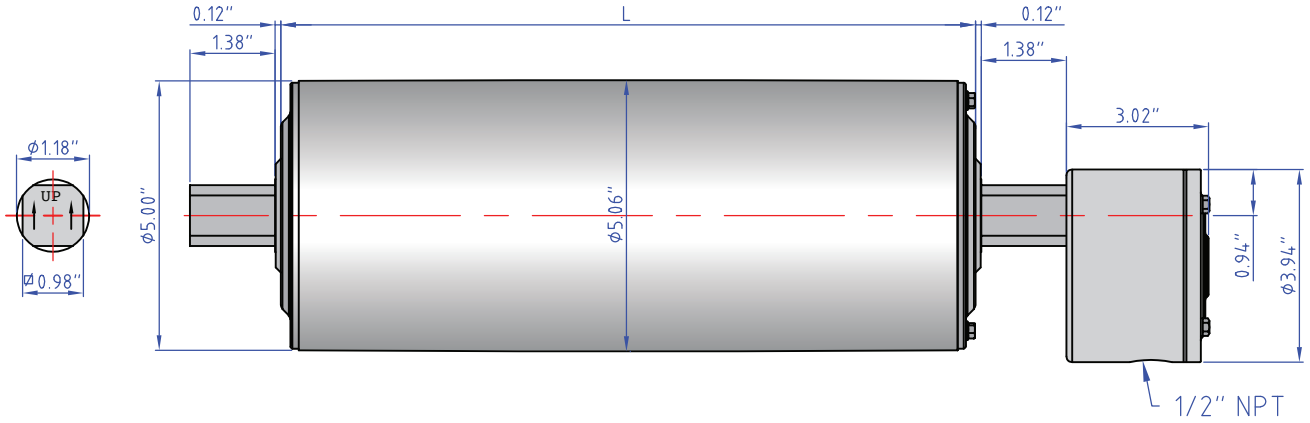

Standard drum motor face widths* (L) in inches:

10.83	11.81	13.78	15.75	17.72	19.69	21.65	23.62	25.59	27.56
29.53	31.50	33.46	35.43	37.40	39.37	41.34	43.31	45.28	47.24

**Some face widths are not available in all horsepowers. For minimum available face widths refer to page 21.*
***Idler dimensions are identical to the drum motor with no junction box.*

Brackets: 160-AB30

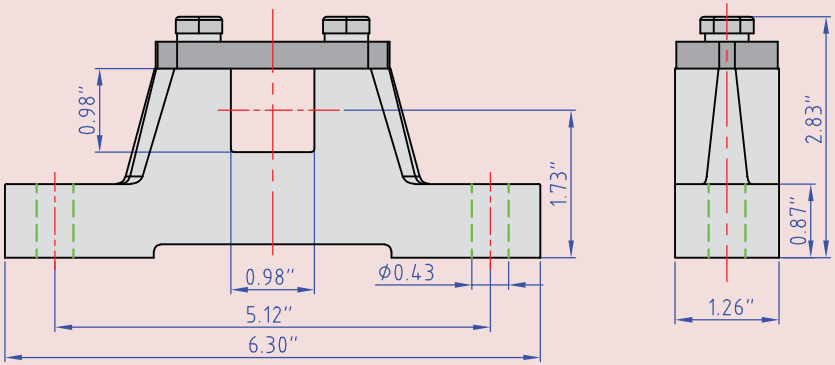

PES Cable Option:

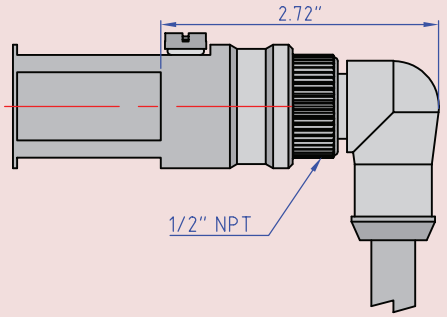

 ©Van der Graaf Inc. All Rights Reserved. Van der Graaf Inc. holds the rights on modifying the designs and its specifications and others noted here. E&OE.

TM127B30 Drum Motor

1.5 HP

V *(ft/min)* **M/G**	316 4/S2	237 4/S2	201 4/S2	124 4/S2
Belt Pull *(lbf)*	156	207	244	396
Drum *RPM*	243	182	155	95

1.0 HP

V *(ft/min)* **M/G**	646 2/S2	484 2/S2	411 2/S2	316 4/S2	237 4/S2	201 4/S2	147 4/S2	124 4/S2	110 4/S2	73 4/PL2	58 4/PL2	49 4/PL2	38 4/PL2	
Belt Pull *(lbf)*	51	68	80	104	138	163	223	264	298	449	565	669	767	
Drum *RPM*	497	372	316	243	182	155	113	95	85	56	45	38	29	

0.75 HP

V *(ft/min)* **M/G**	651 2/S2	488 2/S2	414 2/S2	328 4/S2	246 4/S2	209 4/S2	152 4/S2	134 4/S3	114 4/S2	97 4/S2	87 6/S2	74 6/S2	62 4/S3	56 4/S3	50 4/PL2
Belt Pull *(lbf)*	38	50	59	75	100	118	162	183	216	253	282	332	366	408	491
Drum *RPM*	501	375	318	252	189	161	117	103	88	75	67	57	48	43	38

V *(ft/min)* **M/G**	40 4/PL2
Belt Pull *(lbf)*	617
Drum *RPM*	31

0.5 HP

V *(ft/min)* **M/G**	321 4/S2	241 4/S2	205 4/S2	149 4/S2	131 4/S2	98 4/S2	83 4/S2	64 6/S2	54 4/S3	41 4/S3	33 6/PL2	26 6/PL2
Belt Pull *(lbf)*	51	68	80	110	125	167	197	256	303	400	496	630
Drum *RPM*	247	185	158	115	101	75	64	49	42	32	25	20

0.34 HP

V *(ft/min)* **M/G**	322 4/S2	241 4/S2	205 4/S2	149 4/S2	131 4/S2	99 4/S2	84 4/S2	61 4/S3	54 4/S3	41 4/S3
Belt Pull *(lbf)*	35	46	54	75	85	113	133	183	206	272
Drum *RPM*	248	185	158	115	101	76	65	47	42	32

0.25 HP

V *(ft/min)* **M/G**	11.1 4/PL3	8.7 4/PL3	7.3 4/PL3	5.8 4/PL3
Belt Pull *(lbf)*	738	767	767	767
Drum *RPM*	8.5	6.7	5.6	4.5

V = Belt Speed (ft/min)

M/G = Motor/Gear Reducer Configuration (at rated horsepower)

High Speed Low Torque ◀ 2/S2 | 4/S2 | 6/S2 | 2/S3 | 4/S3 | 6/S3 | 2/PL2 | 4/PL2 | 6/PL2 | 2/PL3 | 4/PL3 | 6/PL3 ▶ *Low Speed High Torque*

 ©Van der Graaf Inc. All Rights Reserved. Van der Graaf Inc. holds the rights on modifying the designs and its specifications and others noted here. E&OE.

TM138B30 Drum Motor *(matching Idler KT138B30**)*

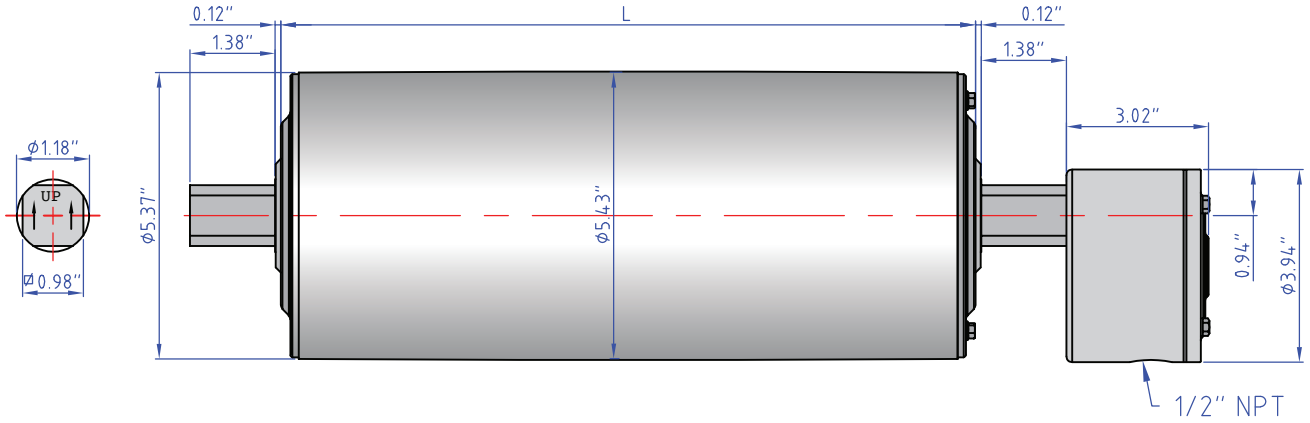

Standard drum motor face widths* (L) in inches:

10.83	11.81	13.78	15.75	17.72	19.69	21.65	23.62	25.59	27.56
29.53	31.50	33.46	35.43	37.40	39.37	41.34	43.31	45.28	47.24

**Some face widths are not available in all horsepowers. For minimum available face widths refer to page 21.*
***Idler dimensions are identical to the drum motor with no junction box.*

Brackets: 160-AB30

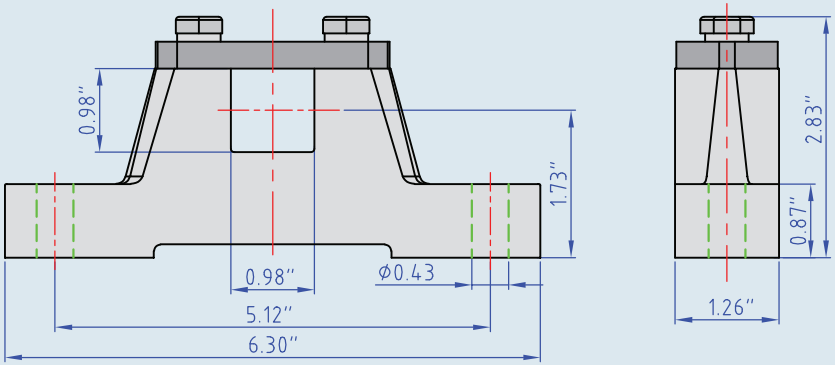

PES Cable Option:

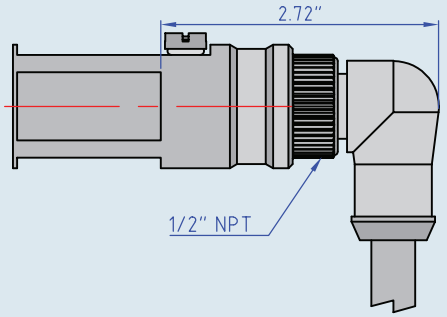

 ©Van der Graaf Inc. All Rights Reserved. Van der Graaf Inc. holds the rights on modifying the designs and its specifications and others noted here. E&OE.

TM138B30 Drum Motor

1.5 HP

V *(ft/min)* **M/G**	343 4/S2	258 4/S2	218 4/S2	135 4/S2
Belt Pull *(lbf)*	156	208	246	398
Drum *RPM*	242	181	154	95

1.0 HP

V *(ft/min)* **M/G**	702 2/S2	526 2/S2	447 2/S2	343 4/S2	258 4/S2	218 4/S2	160 4/S2	135 4/S2	120 4/S2	79 4/PL2	63 4/PL2	53 4/PL2	41 4/PL2	
Belt Pull *(lbf)*	51	68	80	104	139	164	224	266	299	451	568	672	767	
Drum *RPM*	494	370	315	242	181	154	112	95	84	56	44	37	29	

0.75 HP

V *(ft/min)* **M/G**	707 2/S2	530 2/S2	450 2/S2	356 4/S2	267 4/S2	227 4/S2	165 4/S2	146 4/S3	124 4/S2	105 4/S2	95 6/S2	80 6/S2	67 4/S3	61 4/S3	54 4/PL2
Belt Pull *(lbf)*	38	50	59	75	100	118	162	183	216	253	282	332	366	408	491
Drum *RPM*	501	375	318	252	189	161	117	103	88	75	67	57	48	43	38

V *(ft/min)* **M/G**	43 4/PL2
Belt Pull *(lbf)*	617
Drum *RPM*	31

0.5 HP

V *(ft/min)* **M/G**	349 4/S2	262 4/S2	223 4/S2	162 4/S2	142 4/S2	106 4/S2	90 4/S2	70 6/S2	59 4/S3	45 4/S3	36 6/PL2	28 6/PL2
Belt Pull *(lbf)*	51	68	80	111	126	168	198	257	305	402	499	633
Drum *RPM*	246	184	157	114	100	75	64	49	41	31	25	20

0.34 HP

V *(ft/min)* **M/G**	350 4/S2	262 4/S2	223 4/S2	162 4/S2	142 4/S2	108 4/S2	91 4/S2	66 4/S3	59 4/S3	45 4/S3
Belt Pull *(lbf)*	35	46	55	75	85	113	133	184	207	273
Drum *RPM*	246	184	157	114	100	76	64	47	41	31

0.25 HP

V *(ft/min)* **M/G**	12 4/PL3	9 4/PL3	8 4/PL3	6 4/PL3
Belt Pull *(lbf)*	742	767	767	767
Drum *RPM*	8	7	6	4

V = Belt Speed (ft/min)

M/G = Motor/Gear Reducer Configuration (at rated horsepower)

High Speed Low Torque ◀ 2/S2 | 4/S2 | 6/S2 | 2/S3 | 4/S3 | 6/S3 | 2/PL2 | 4/PL2 | 6/PL2 | 2/PL3 | 4/PL3 | 6/PL3 ▶ *Low Speed High Torque*

 ©Van der Graaf Inc. All Rights Reserved. Van der Graaf Inc. holds the rights on modifying the designs and its specifications and others noted here. E&OE.

TM160B40 Drum Motor *(matching Idler KT160B40**)*

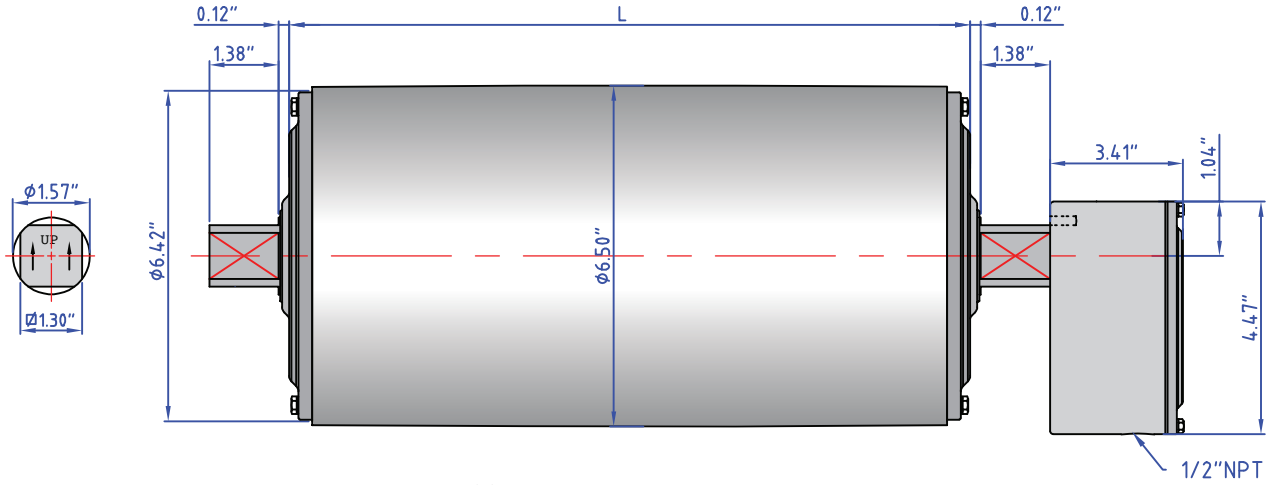

Standard drum motor face widths* (L) in inches:

15.75	16.73	17.72	19.69	21.65	23.62	25.59	27.56	29.53
31.50	33.46	35.43	37.40	39.37	41.34	43.31	45.28	47.24

**Some face widths are not available in all horsepowers. For minimum available face widths refer to page 21.*
***Idler dimensions are identical to the drum motor with no junction box.*

Brackets: 160-AB40

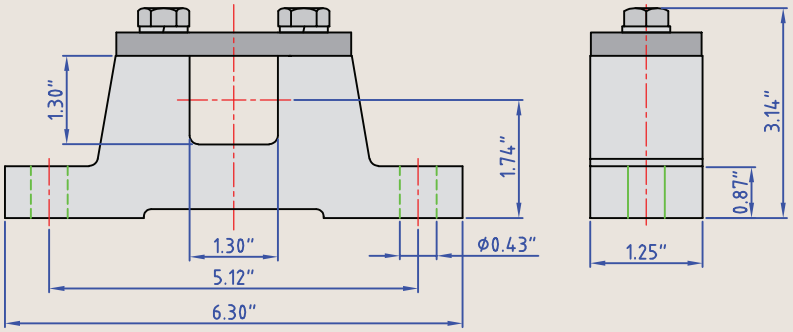

PES Cable Option:

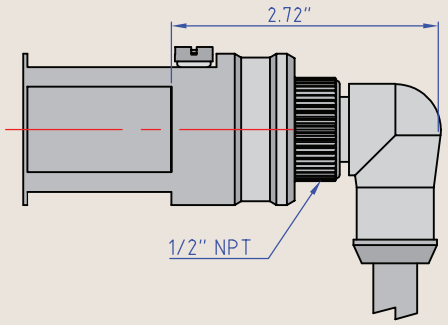

 ©Van der Graaf Inc. All Rights Reserved. Van der Graaf Inc. holds the rights on modifying the designs and its specifications and others noted here. E&OE.

TM160B40 Drum Motor

3.0 HP

V *(ft/min)* M/G	272 2/S2	236 2/S2	213 2/S2	201 2/S2	189 2/S2
Belt Pull *(lbf)*	339	391	434	460	488
Drum *RPM*	160	139	126	119	111

2.0 HP

V *(ft/min)* M/G	272 2/S2	236 2/S2	213 2/S2	201 2/S2	189 2/S2	165 4/S2	154 4/S2	142 4/S2	130 4/S2	114 2/S3	108 2/PL2	87 2/PL2	74 4/PL2
Belt Pull *(lbf)*	232	266	296	313	333	381	410	444	484	407	580	650	800
Drum *RPM*	160	139	125	118	111	97	90	83	76	67	64	50	44

1.5 HP

V *(ft/min)* M/G	165 4/S2	154 4/S2	142 4/S2	130 4/S2	118 2/S2	106 4/S2	94 4/S2
Belt Pull *(lbf)*	280	290	333	355	391	434	489
Drum *RPM*	97	90	83	76	69	63	56

1.0 HP

V *(ft/min)* M/G	130 4/S2	118 4/S2	106 4/S2	94 4/S2	80 4/S2	73 4/S2	57 4/S3	54 4/PL2	47 4/S3	43 4/PL2
Belt Pull *(lbf)*	242	266	296	333	392	315	547	561	489	525
Drum *RPM*	76	69	63	56	47	43	33	32	28	25

***Note**: Highlighted are available with an Electromagnetic Brake unit (RTM160B40)*

V = Belt Speed (ft/min)

M/G = Motor/Gear Reducer Configuration (at rated horsepower)

High Speed Low Torque ◀ 2/S2 | 4/S2 | 6/S2 | 2/S3 | 4/S3 | 6/S3 | 2/PL2 | 4/PL2 | 6/PL2 | 2/PL3 | 4/PL3 | 6/PL3 ▶ *Low Speed High Torque*

 ©Van der Graaf Inc. All Rights Reserved. Van der Graaf Inc. holds the rights on modifying the designs and its specifications and others noted here. E&OE.

TM215B40 Drum Motor *(matching Idler KT215B40**)*

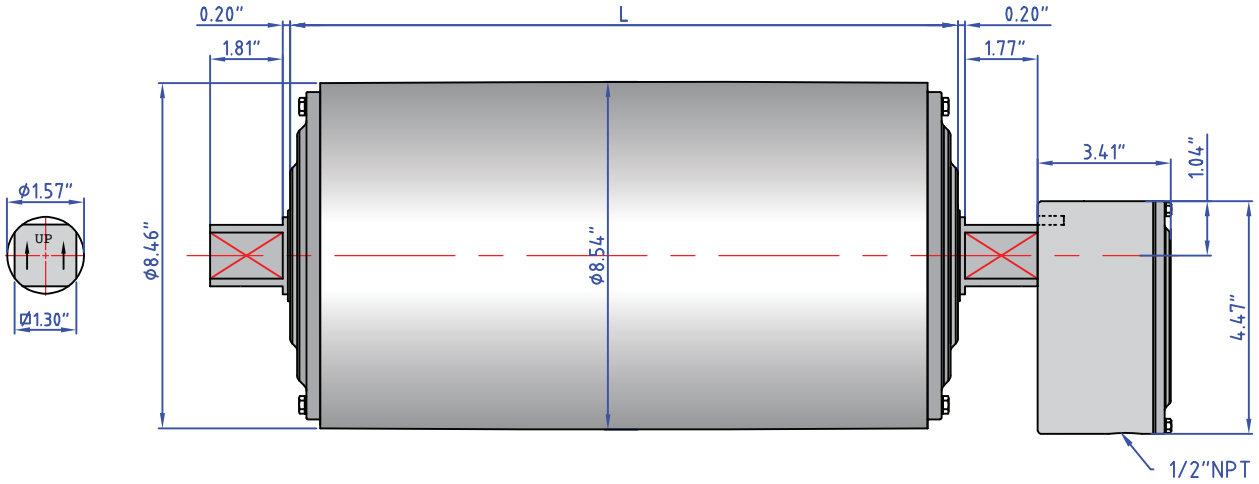

Standard drum motor face widths* (L) in inches:

19.69	21.65	23.62	25.59	27.56	29.53	31.50	33.46	35.43
37.40	39.37	41.34	43.31	45.28	47.24			

**Some face widths are not available in all horsepowers. For minimum available face widths refer to page 21.*
***Idler dimensions are identical to the drum motor with no junction box.*

Brackets: 215-AB40

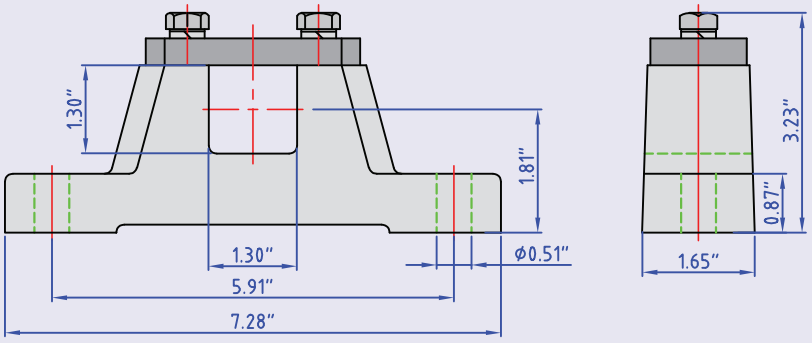

PES Cable Option:

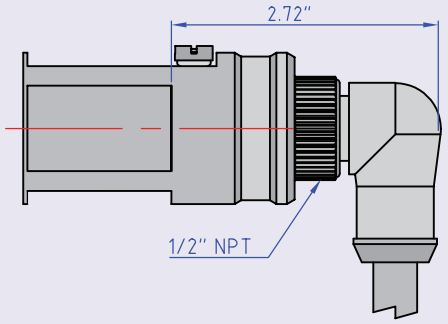

 ©Van der Graaf Inc. All Rights Reserved. Van der Graaf Inc. holds the rights on modifying the designs and its specifications and others noted here. E&OE.

TM215B40 Drum Motor

7.5 HP

V *(ft/min)* **M/G**	1117 2/S2	912 2/S2	821 2/S2	657 2/S2	583 2/S2	547 2/S3	465 2/S2	403 2/S2	358 2/S2	335 2/S2	310 2/S2	255 2/S2	228 2/S3
Belt Pull *(lbf)*	198	243	270	337	285	405	476	549	618	662	715	651	972
Drum *RPM*	504	412	371	297	263	247	210	182	162	151	140	115	103

5.0 HP

V *(ft/min)* **M/G**	1117 2/S2	912 2/S2	821 2/S2	657 2/S2	583 2/S2	547 2/S3	465 2/S2	403 2/S2	358 2/S2	335 2/S2	310 2/S2	275 4/S3	255 2/S2	238 2/S2	234 4/S2
Belt Pull *(lbf)*	145	178	198	247	278	297	349	402	453	485	524	521	636	681	613
Drum *RPM*	503	411	370	296	263	246	209	182	161	151	140	124	115	107	105

V *(ft/min)* **M/G**	228 2/S3	221 2/S2	202 4/S3	198 2/S3	162 2/S3	114 4/S3
Belt Pull *(lbf)*	712	552	709	821	1000	1250
Drum *RPM*	103	100	91	89	73	51

3.0 HP

V *(ft/min)* **M/G**	679 4/S2	559 4/S2	483 4/S2	398 4/S2	325 4/S2	293 4/S2	233 4/S2	234 4/S2	208 4/S2	202 4/S2	166 4/S2	155 4/S2	144 4/S2	128 4/S2	119 4/S2
Belt Pull *(lbf)*	130	158	183	222	272	302	379	377	425	437	533	569	614	692	741
Drum *RPM*	307	253	218	180	147	132	105	106	94	91	75	70	65	58	54

V *(ft/min)* **M/G**	114 4/S3	99 4/S3	81 4/S3	70 4/S3	63 4/S3
Belt Pull *(lbf)*	774	893	1087	1254	1412
Drum *RPM*	52	45	37	32	28

2.0 HP

V *(ft/min)* **M/G**	685 4/S2	564 4/S2	488 4/S2	402 4/S2	376 6/S2	328 4/S2	295 4/S2	236 4/S2	210 4/S2	204 4/S2	197 6/S2	185 4/S2	167 4/S2	157 6/S2	145 4/S2
Belt Pull *(lbf)*	82	99	115	140	164	171	190	237	267	275	314	304	335	394	386
Drum *RPM*	309	255	220	181	170	148	133	107	95	92	89	83	76	71	65

V *(ft/min)* **M/G**	136 6/S2	129 4/S2	120 4/S2	111 4/S2	104 6/S2	97 6/S2	86 6/S2	77 6/S3	71 4/S3	67 6/S3	55 6/S3	47 6/S3
Belt Pull *(lbf)*	455	435	466	503	592	639	719	805	789	928	1131	1304
Drum *RPM*	61	58	54	50	47	44	39	35	32	30	25	21

V = Belt Speed (ft/min)
M/G = Motor/Gear Reducer Configuration (at rated horsepower)

High Speed Low Torque — 2/S2 | 4/S2 | 6/S2 | 2/S3 | 4/S3 | 6/S3 | 2/PL2 | 4/PL2 | 6/PL2 | 2/PL3 | 4/PL3 | 6/PL3 — *Low Speed High Torque*

 ©Van der Graaf Inc. All Rights Reserved. Van der Graaf Inc. holds the rights on modifying the designs and its specifications and others noted here. E&OE.

TM215B50 Drum Motor *(matching Idler KT215B50**)*

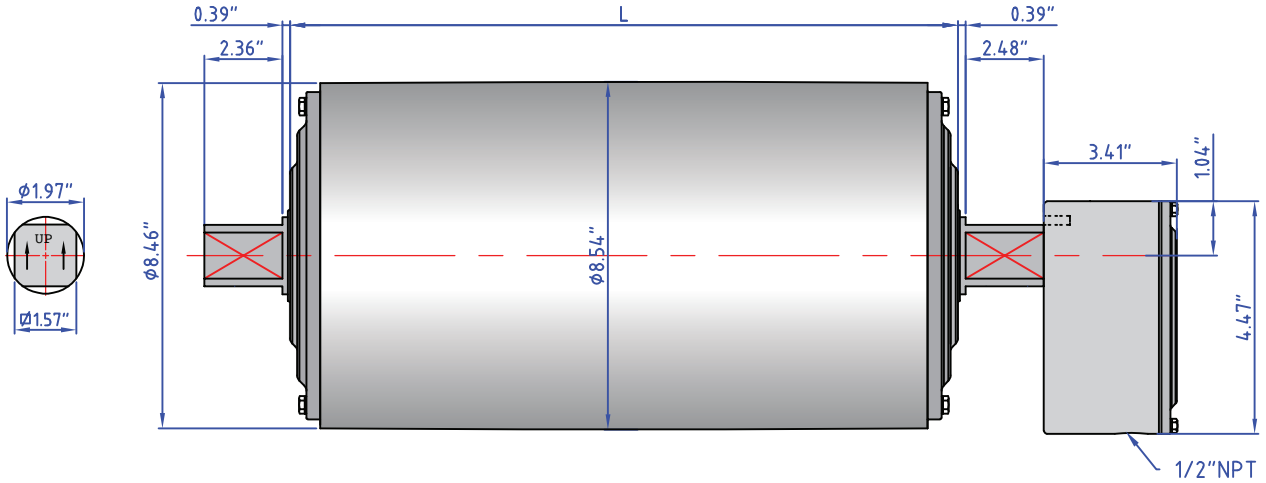

Standard drum motor face widths* (L) in inches:

19.69	21.65	23.62	25.59	27.56	29.53	31.50	33.46	35.43
37.40	39.37	41.34	43.31	45.28	47.24			

**Some face widths are not available in all horsepowers. For minimum available face widths refer to page 21.*
***Idler dimensions are identical to the drum motor with no junction box.*

Brackets: 215-AB50

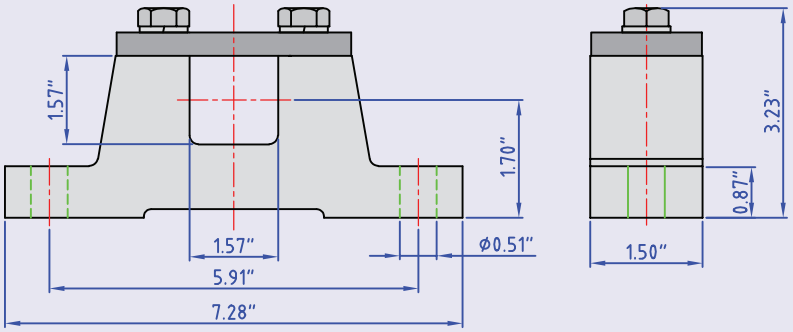

PES Cable Option:

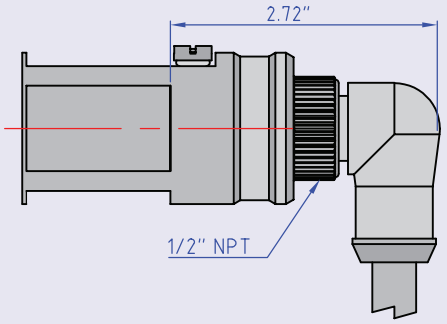

 ©Van der Graaf Inc. All Rights Reserved. Van der Graaf Inc. holds the rights on modifying the designs and its specifications and others noted here. E&OE.

TM215B50 Drum Motor

7.5 HP

V *(ft/min)* **M/G**	**142** 2/PL2	**129** 2/PL2		
Belt Pull *(lbf)*	**1559**	**1714**		
Drum *RPM*	**64**	**58**		

5.0 HP

V *(ft/min)* **M/G**	**142** 2/PL2	**129** 2/PL2	**71** 4/PL2	**65** 4/PL2
Belt Pull *(lbf)*	**1275**	**1403**	**2317**	**2531**
Drum *RPM*	**64**	**58**	**32**	**29**

3.0 HP

V *(ft/min)* **M/G**	**71** 4/PL2	**65** 4/PL2	**47** 6/PL2	**43** 6/PL2
Belt Pull *(lbf)*	**1241**	**1365**	**1887**	**2075**
Drum *RPM*	**32**	**29**	**21**	**19**

2.0 HP

V *(ft/min)* **M/G**	**48** 6/PL2	**44** 6/PL2		
Belt Pull *(lbf)*	**1291**	**1419**		
Drum *RPM*	**22**	**20**		

V = Belt Speed (ft/min)
M/G = Motor/Gear Reducer Configuration (at rated horsepower)

High Speed Low Torque ◄ 2/S2 | 4/S2 | 6/S2 | 2/S3 | 4/S3 | 6/S3 | 2/PL2 | 4/PL2 | 6/PL2 | 2/PL3 | 4/PL3 | 6/PL3 ► *Low Speed High Torque*

 ©Van der Graaf Inc. All Rights Reserved. Van der Graaf Inc. holds the rights on modifying the designs and its specifications and others noted here. E&OE.

BELT PROFILE CHART

BELT	DRUM PROFILE*												SLEEVE PROFILE*			
	TM100		TM113		TM127		TM138		TM160		TM215		TM127		TM160	
	No. of Teeth	Pitch ∅ (inches)	No. of Teeth	Pitch Dia. (inches)	No. of Teeth	Pitch Dia. (inches)	No. of Teeth	Pitch Dia. (inches)	No. of Teeth	Pitch Dia. (inches)	No. of Teeth	Pitch Dia. (inches)	No. of Teeth	Pitch Dia. (inches)	No. of Teeth	Pitch Dia. (inches)
INTRALOX																
Series 100							19	6.14					19	6.14		
Series 400							10	6.49	12	7.75	15	9.64	10	6.49	12	7.75
Series 560			48	4.82												
Series 800			9	5.89			10	6.52	12	7.79	15	9.69	10	6.52	12	7.79
Series 900	13	4.48	15	5.16	17	5.83							17	5.83		
Series 1000	23	4.46					30	5.81					30	5.81		
Series 1100	24	4.65	26	5.03	30	5.81	32	6.19					32	6.19		
Series 1400							19	6.14	24	7.74			19	6.14	24	7.74
Series 1500			32	5.14			37	5.98								
Series 1600	14	4.63	16	5.28	18	5.93	19	6.26	22	7.24	29	9.53	19	6.26	23	7.56
Series 2200					13	6.31							14	6.79		
Series 2400			17	5.47	19	6.12	20	6.42	23	7.38	30	9.62	20	6.42	24	7.70
Series 3000					11	7.1										
Series 4400							10	6.50								
ThermoDrive 8026 Endless			15	4.94			18	5.92	21	6.91			18	5.92	22	7.24
ThermoDrive 8050 Endless			8	5.13	9	5.77	10	6.41	12	7.70	15	9.62	10	6.41	12	7.70
Series 8140																
VOLTA																
Super Drive- 3mm thick belt	10	4.90							13	6.41	17	8.49	13	6.41	16	7.99
Super Drive- 3mm thick belt									14	6.91			14	6.91		
Super Drive- 4mm thick belt									13	6.37	17	8.56	13	6.37	16	8.05
Super Drive- 4mm thick belt									14	7.02			14	7.02		
Mini Super Drive- 2.5mm thick belt	15	4.71					19	5.99	20	6.31			19	5.99		
Dual Drive							10	6.14	12	7.39	15	9.22	10	6.14	12	7.39
Mini Dual Drive	14	4.39			18	5.67	19	5.99	22	6.95						

***Profile can be machined either directly onto the stainless-steel drive drum or machined onto a removable stainless-steel drive sleeve.**

NOTE: Heavy-Duty Edge (HDE), Clean Release, Activated Roller Belt (ARB), Tight Turning Radius Belt, and ThermoLace are available upon request. Contact VDG Customer Service for belt series not listed.

 ©Van der Graaf Inc. All Rights Reserved. Van der Graaf Inc. holds the rights on modifying the designs and its specifications and others noted here. E&OE.

BELT PROFILE CHART

BELT	DRUM PROFILE*												SLEEVE PROFILE*			
	TM100		TM113		TM127		TM138		TM160		TM215		TM127		TM160	
	No. of Teeth	Pitch Dia. (inches)	No. of Teeth	Pitch Dia. (inches)	No. of Teeth	Pitch Dia. (inches)	No. of Teeth	Pitch Dia. (inches)	No. of Teeth	Pitch Dia. (inches)	No. of Teeth	Pitch Dia. (inches)	No. of Teeth	Pitch Dia. (inches)	No.# of Teeth	Pitch Dia. (inches)
HABASIT																
Clean Drive 25							18	6.06					18	6.06		
Clean Drive 50							10	6.35	12	7.60			10	6.35	12	7.60
Clean Drive M40									13	6.41	17	8.49				
M1200							36	5.90					36	5.90		
M2500			16	5.20	18	5.77							18	5.77		
M3800							13	6.36					13	6.36		
M5000							10	6.50	12	7.76	15	9.66	10	6.50	12	7.76
HDU620 GP Belt Material							10	6.50	12	7.70			10	6.50	12	7.70
SM605																
Gates																
PC20							10	6.20					10	6.20		
Rexnord																
Pactitan							42	5.71								
Wire Belt Company																
Compact Grid 10mm					21											
Compact Grid 10mm with Flights					22											
Eye Flex	Number of Teeth Depends on Belt Number															
Flat Flex																
Ammeraal Beltech																
Soliflex Pro Mini	14	4.49	16	5.13			18	5.77	22	7.05			20	6.41	24	7.69
Soliflex Pro	8	5.13	9	5.77			10	6.41	12	7.69	15	9.61	10	6.41	12	7.69

***Profile can be machined either directly onto the stainless-steel drive drum or machined onto a removable stainless-steel drive sleeve.**

NOTE: Heavy-Duty Edge (HDE), Clean Release, Activated Roller Belt (ARB), Tight Turning Radius Belt, and ThermoLace are available upon request. Contact VDG Customer Service for belt series not listed.

 ©Van der Graaf Inc. All Rights Reserved. Van der Graaf Inc. holds the rights on modifying the designs and its specifications and others noted here. E&OE.

MINIMUM FACE WIDTH (L IN INCHES)

TM100B25

HP	0.25			0.16						0.14			
Motor/Gear Reducer	4/S2	4/PL2	4/PL3	4/S2	4/PL2	4/PL3	6/S2	6/PL2	6/PL3	4/S2	4/PL2	4/PL3	
Min. Face Width (L)	12.20	12.20	14.17	12.20	12.20	14.17	12.20	12.20	14.17	10.24	10.24	12.20	

TM113B25

HP	0.75	0.5			0.34					0.25			
Motor/Gear Reducer	2/S2	2/S2	4/S2	4/PL2	2/S2	4/S2	4/PL2	6/S2	6/PL2	4/S2	4/PL2	4/PL3	
Min. Face Width (L)	12.20	12.20	14.17	14.17	10.24	12.20	12.20	14.17	14.17	12.20	12.20	14.17	

TM127B30 / TM138B30

HP	1.5	1.0			0.75					0.5					0.34		0.25	
Motor/Gear Reducer	4/S2	2/S2	4/S2	4/PL2	2/S2	6/S2	4/S2	4/S3	4/PL2	6/S2	4/S2	4/S3	4/PL2	6/PL2	4/S2	4/S3	4/PL3	
Min. Face Width (L)	14.76	13.78	13.78	15.75	12.80	13.78	12.80	13.78	14.76	12.80	12.80	13.78	14.76	14.76	11.81	12.80	15.75	

TM160B40

HP	3.0	2.0			1.5	1.0			0.75			
Motor/Gear Reducer	2/S2	2/S2	4/S2	2/PL2	4/PL2	4/S2	4/S2	4/S3	4/PL2	4/S2	4/S3	4/PL2	
Min. Face Width (L)	16.73	15.75	17.72	17.72	17.72	15.75	15.75	16.73	17.72	15.75	16.73	17.72	

TM215B40 / TM215B50

HP	7.5			5.0						3.0				2.0				
Motor/Gear Reducer	2/S2	2/S3	2/PL2	2/S2	2/S3	2/PL2	4/S2	4/S3	4/PL2	4/S2	4/S3	4/PL2	6/PL2	4/S2	6/S2	4/S3	6/S3	6/PL2
Min. Face Width (L)	21.65	23.62	23.62	21.65	23.62	23.62	21.65	23.62	23.62	19.69	21.65	23.62	23.62	19.69	21.65	21.65	23.62	23.62

 ©Van der Graaf Inc. All Rights Reserved. Van der Graaf Inc. holds the rights on modifying the designs and its specifications and others noted here. E&OE.

BELT PULL CALCULATIONS

CONVEYING SYSTEM	F_0  Force without Load	F_1  Force to Convey Materials Horizontally	F_2 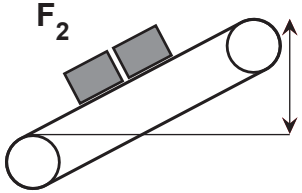 Force to Convey Materials on Incline
Roller Bed Conveyor R 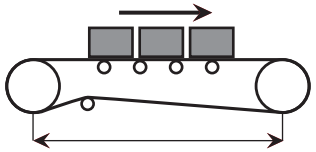	$F_0 = 0.04\ (2P + Q)\ L$	$F_1 = 0.04 \times R \times L$	$F_2 = R \times H$
Slider Bed Conveyor R 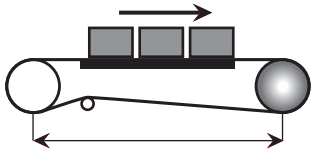	$F_0 = 1.1 \times P \times L \times C$	$F_1 = 1.1 \times R \times L \times C$	$F_2 = R \times H$

BELT PULL (BP)

$$BP = (F_0 + F_1 + F_2)$$

F = Force (lbs.)

P = Belt weight (lbs./linear ft.)

Q = Weight of rotating parts in pounds per foot of length of belt conveyor

R = Weight in pounds of conveyor product per foot of belt conveyor length

C = Co-efficient of friction between conveyor belt and top slider bed

L = Center to center length (feet)

H = Height (feet)

Calculations:

 ©Van der Graaf Inc. All Rights Reserved. Van der Graaf Inc. holds the rights on modifying the designs and its specifications and others noted here. E&OE.

NOTES



Canada



USA



Netherlands

VDG (Van der Graaf) has provided conveyor drive solutions to the material handling and processing industries for over half a century. VDG continues as the leader in the design and manufacturing of drum motors by consistently investing in research and development and utilizing cutting-edge production technology and automation. With in-house precision manufacturing, VDG ensures product quality, fast delivery, and superior customer support.

VDG adheres to high quality standards and a simple principle: design a superior product to meet customer needs in a changing marketplace.

600-00 v.2 (04/2026) ©Van der Graaf Inc. All Rights Reserved.