STANDARD SERIES DRUM MOTORS | TM100 - TM315

ø4.0" to ø12.5" diameter • 0.11 a 15.0 hp

- *Dimensions and Specifications*
- *Design Features and Benefits*
- *Belt Pull Calculations*

BELT PULL (BP) = (F0 + F1 + F2)

Roller Bed Conveyor	Slider Bed Conveyor
F0 = 0.04 (2P + Q) L	F0 = 1.1 x P x L x C
F1 = 0.04 x R x L	F1 = 1.1 x R x L x C
F2 = R X H	F2 = R x H

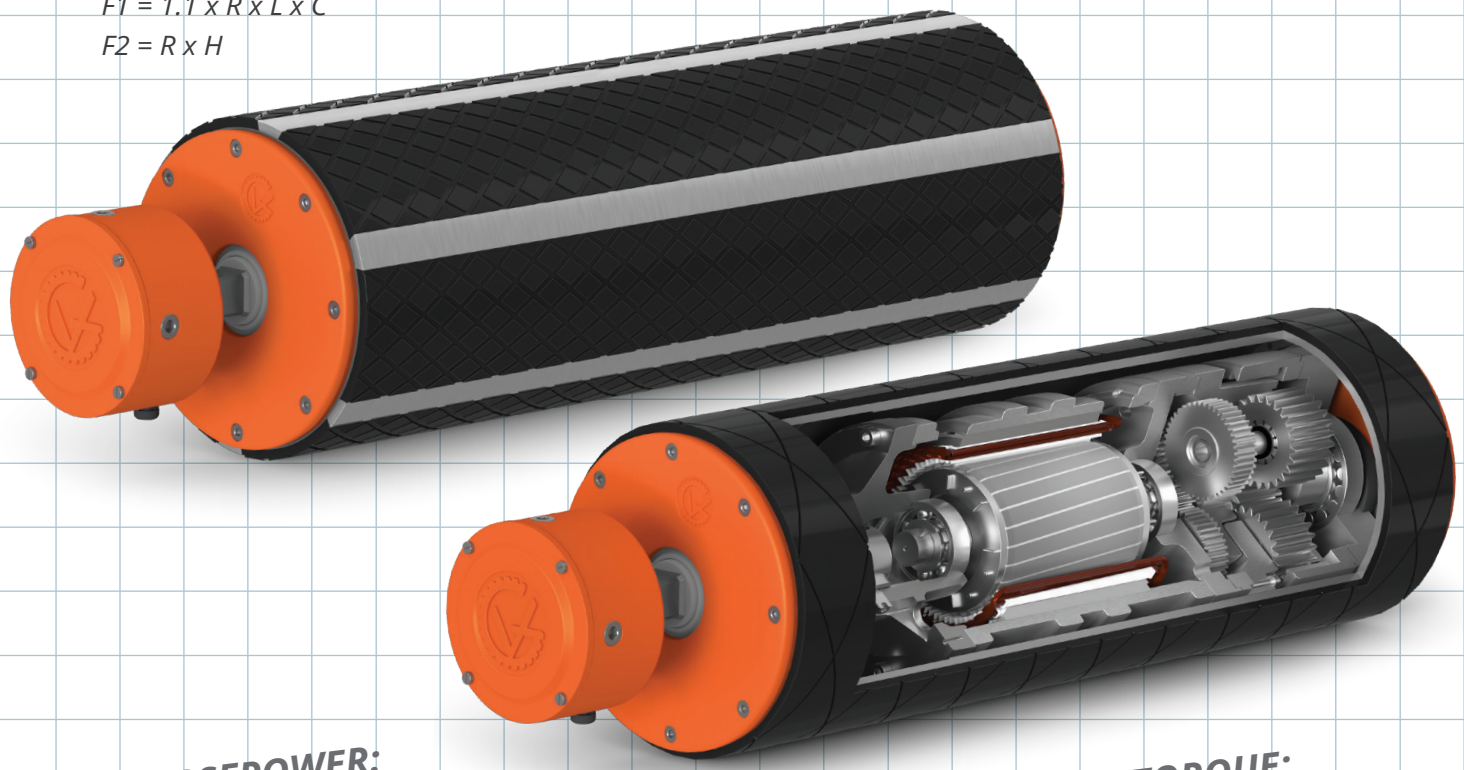

RPM:

$$= \frac{V}{\Pi\,(d/12)}$$

V = Velocity (ft/min)

HORSEPOWER:

$$HP = \frac{T"lbs. \times RPM}{63025}$$

TORQUE:

$$T"lbs. = \frac{63025 \times HP}{RPM}$$

Made In USA

TABLE OF CONTENTS

The Drum Motor 1-2

Design Benefits 1

Standard Features & Options 2

Technical Information: 3-24

Drum Motor		Dimensions	Specifications
TM100B25	(4.0 ø, 0.25 - 0.11 hp)	3	4-5
TM113B25	(4.5"ø, 0.75 - 0.16 hp)	6	7-8
TM127B30	(5.0"ø, 1.5 - 0.25 hp)	9	10
TM138B30	(5.4"ø, 1.5 - 0.25 hp)	11	12
TM160B40	(6.5"ø, 3.0 - 1.0 hp)	13	14
TM215B40	(8.5"ø, 7.5 - 2.0 hp)	15	16
TM215B50	(8.5"ø, 7.5 - 2.0 hp)	17	18
TM315B50	(12.5 ø, 15 - 5 hp)	19	20
TM315B60	(12.5"ø, 15 - 5 hp)	21	22
TM315A75	(12.5"ø, 15 - 10 hp)	23	24

Minimum Face Width Chart (TM100 - TM315 Series) 25

Belt Pull Calculations 26

DESIGN BENEFITS

The VDG Drum Motor is a one-component conveyor belt drive for belt conveyor applications such as packaging, warehousing, mining, aggregate, postal, parcel, airline baggage handling, and food processing. All components of the drum motor are enclosed inside the drive roller, protected from outside elements that can impact the reliability and performance of the drive. With no external components such as motor, gearbox, sprockets, chain, chain guard, or pillow block bearings, the drum motor improves workforce safety and eliminates routine maintenance cycles, reducing downtime and expenses associated with traditional conveyor belt drives.

All components of the VDG Drum Motor are designed for 80,000 hours of continuous operation with no required maintenance. The 96% mechanically efficient gear reducer is in-line with the electric motor, increasing energy efficiency by 25% to 30%, resulting in lower energy consumption and costs. VDG Drum Motors provide a space-saving, less complex, efficient, reliable, and maintenance-free solution to power belt conveyors. Available in a wide range of diameters, belt speeds, horsepower, face widths, and options to suit all types of belt conveyor applications.

View Video

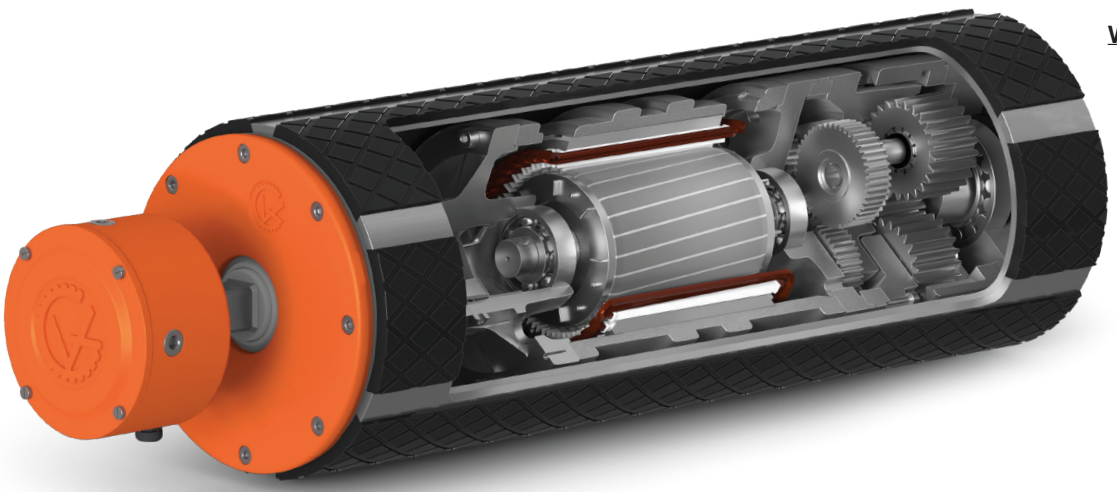



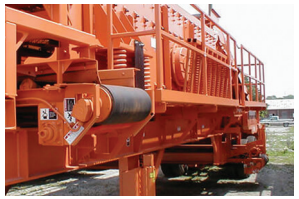

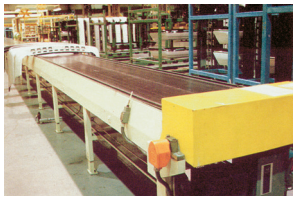



REDUCE ENERGY CONSUMPTION

With 96% mechanical efficiency and a premium-efficiency electric motor, VDG Drum Motors reduces energy consumption, resulting in energy savings of 25% to 30% over traditional external conveyor drives.

ELIMINATE MAINTENANCE CYCLES

Maintenance-free VDG Drum Motors are designed for 80,000 hours of continuous operation before an oil change that is performed without removing the drive. With no external drive components, the drum motor eliminates the constant need for lubricating bearings, chain adjustment, and routine maintenance cycles.

INCREASE WORKFORCE SAFETY

With all components enclosed inside the drive roller, the VDG Drum Motor eliminates the external components of a traditional conveyor drive that could pose hazards to workforce safety.

ENHANCE SPACE UTILIZATION

Low-profile VDG Drum Motors reduce the overall footprint of the conveyor (area the conveyor occupies), allowing more conveyors to fit on the same floor or overhead space.

REDUCE NOISE LEVELS

Gears are manufactured in-house by VDG using state-of-the-art gear cutting and shaping equipment, honed and ground to DIN6 (AGMA12) industry standards for low decibel noise levels that exceed OSHA requirements.

 ©2024 *Van der Graaf Inc. All Rights Reserved.* Van der Graaf Inc. holds the rights on modifying the designs and its specifications and others noted here. E&OE.

ELECTRIC MOTORS
All VDG premium-efficiency electric motors are manufactured in-house by VDG to Class H insulation standards, are inverter-duty, and can be supplied for all standard and non-standard voltage at 50 Hz or 60 Hz for 3 phase applications. All VDG electric motors undergo a **Vacuum Pressure Impregnation** (VPI) process, increasing the life of the electric motor.

PRESSURE EQUALIZATION SYSTEM (PES)
Depending on the application, the heat generated by the electric motor and gear reducer during normal operation will raise the internal pressure up to 18 psi. The internal pressure will cause tighter than normal engagement of the oil seals to the shaft, resulting in premature oil seal failure. The increased internal pressure will result in oil leakage and a higher operating temperature. The pressure equalization system (PES) releases the internal pressure above 0.5 psi. Lower internal pressure eliminates oil leaks, reduces the operating temperature, and increases the electric motor and gear reducer performance.

OPTIONS:

NON-STANDARD LENGTH / EXTRA LONG FACE WIDTH
Please contact your VDG technical representative for details.

MECHANICAL BACKSTOP (TB)
To prevent rollback for incline conveyors, the backstop device in the drum motor allows the drum motor to rotate only in one direction.

ELECTROMAGNETIC BRAKE (RTM)
The mechanical electromagnetic brake inside the drum motor allows the drum motor to start and stop 45 times per minute. Available for TM127 and higher.

OVERLOAD PROTECTION (GV-THERM)
The GV-THERM, a thermal bimetal device embedded into the motor windings that reacts to temperature, provides an additional layer of thermal overload protection.

ALL-STAINLESS STEEL
For hygienic applications, sanitary drum motors are constructed with stainless steel, including end caps, drum, shafts and junction box.

DRUM MOTOR LAGGING
VDG offers a complete line of lagging materials. Rubber lagging using the hot-bond vulcanization process and, for more abrasive applications, the VDG patented IronGrip™ lagging system is available for TM160 and higher.

DRUM MOTOR LAGGING OPTIONS:

Hot-Bond Rubber Lagging:
Rubber is wrapped to the desired thickness around the drum using a hot-bond vulcanizing process, providing a seamless and tear-resistant lagging. Various durometer hardness lagging is available in black rubber or USDA/FDA blue or white nitrile rubber in plain, diamond, or chevron patterns.

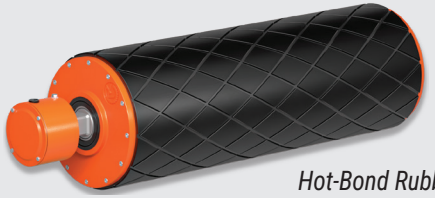

Hot-Bond Rubber Lagging

VDG IronGrip™ Lagging: (TM160 & higher)
An extremely durable lagging that increases performance and provides 4 to 5 times longer service life than standard rubber lagging. The VDG patented IronGrip™ lagging system has metal bars welded lengthwise on the drum with hot-bond vulcanized rubber lagging sections between the bars. The metal bars prevent the rubber from wearing below the bars. For extremely abrasive applications, rubber lagging with ceramic tile is also available. IronGrip™ lagging increases traction by 40%, improves belt tracking, and eliminates delamination.

View Video

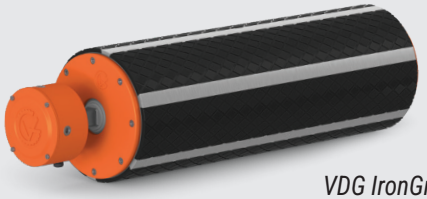

VDG IronGrip™ Lagging

 ©2024 *Van der Graaf Inc. All Rights Reserved.* Van der Graaf Inc. holds the rights on modifying the designs and its specifications and others noted here. E&OE.

TM100B25 Drum Motor *(matching Idler KT100B25**)*

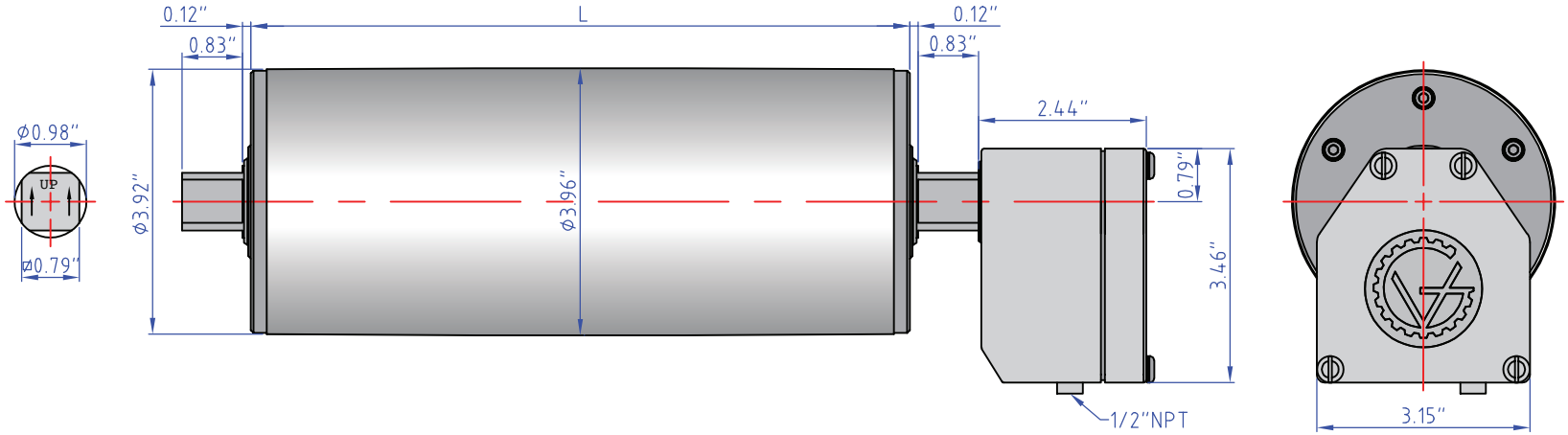

Standard drum motor face widths* (L) in inches:

10.24	10.83	12.20	14.17	16.14	18.11	20.08	22.05	24.02	25.98
27.95	29.92	31.89	33.86	35.83	37.80	39.76	41.73	43.70	45.67

**Some face widths are not available in all horsepowers. For minimum available face widths refer to page 25.*
***Idler dimensions are identical to the drum motor with no junction box.*

Brackets: 100-AB20

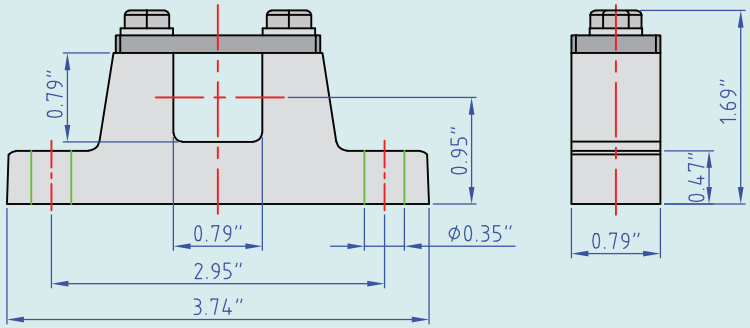

Cable Option:

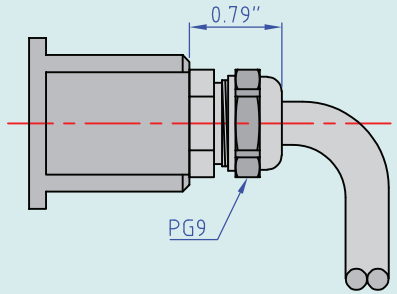

 ©2024 *Van der Graaf Inc. All Rights Reserved.* Van der Graaf Inc. holds the rights on modifying the designs and its specifications and others noted here. E&OE.

TM100B25 Drum Motor

0.25 HP

V *(ft/min)* **M/G**	409 4/S2	327 4/S2	291 4/S2	258 4/S2	227 4/S2	199 4/S2	177 4/PL2	157 4/PL2	149 4/PL2	132 4/PL2	111 4/PL2	106 4/PL2	93 4/PL2	83 4/PL2	69 4/PL2
Belt Pull *(lbf)*	20	25	28	32	36	41	47	52	55	63	74	78	88	100	119
Drum *RPM*	397	317	282	250	220	193	172	152	145	128	108	103	90	81	67

V *(ft/min)* **M/G**	56 4/PL2	44 4/PL3	37 4/PL3	33 4/PL3	27 4/PL3	23 4/PL3	20 4/PL3	17 4/PL3	14 4/PL3
Belt Pull *(lbf)*	148	189	225	253	274	274	274	274	274
Drum *RPM*	54	43	36	32	26	22	19	17	14

0.16 HP

V *(ft/min)* **M/G**	258 4/S2	227 4/S2	199 4/S2	177 4/PL2	157 4/PL2	149 4/PL2	132 4/PL2	111 4/PL2	106 4/PL2	93 4/PL2	83 4/PL2	69 4/PL2	56 4/PL2	44 4/PL3	37 4/PL3
Belt Pull *(lbf)*	20	23	27	30	34	35	40	48	50	57	64	76	94	121	144
Drum *RPM*	250	220	193	172	152	145	128	108	103	90	81	67	54	43	36

V *(ft/min)* **M/G**	33 4/PL3	27 4/PL3	23 4/PL3	20 4/PL3	17 4/PL3	14 4/PL3
Belt Pull *(lbf)*	162	193	230	259	274	274
Drum *RPM*	32	26	22	19	17	14

0.16 HP

V *(ft/min)* **M/G**	305 6/S2	273 6/S2	218 6/S2	194 6/S2	172 6/S2	152 6/S2	105 6/PL2	99 6/PL2	88 6/PL2	74 6/PL2	71 6/PL2	62 6/PL2	55 6/PL2	46 6/PL2	37 6/PL2
Belt Pull *(lbf)*	17	19	24	27	31	35	50	53	60	71	74	85	96	114	142
Drum *RPM*	296	265	212	188	167	148	102	96	85	72	69	60	53	45	36

V *(ft/min)* **M/G**	29 6/PL3	24 6/PL3	22 6/PL3	18 6/PL3	15 6/PL3	13 6/PL3	11 6/PL3	9 6/PL3
Belt Pull *(lbf)*	181	216	243	274	274	274	274	274
Drum *RPM*	28	23	21	17	15	13	11	9

0.14 HP

V *(ft/min)* **M/G**	258 4/S2	227 4/S2	199 4/S2	177 4/PL2	157 4/PL2	149 4/PL2	1332 4/PL2	111 4/PL2	106 4/PL2	93 4/PL2	83 4/PL2	69 4/PL2	56 4/PL2	44 4/PL3	37 4/PL3
Belt Pull *(lbf)*	18	20	23	26	29	31	35	42	42	50	56	67	83	106	126
Drum *RPM*	250	220	193	172	152	145	128	108	103	90	81	67	54	43	36

V *(ft/min)* **M/G**	33 4/PL3	27 4/PL3	23 4/PL3	20 4/PL3	17 4/PL3	14 4/PL3
Belt Pull *(lbf)*	142	169	201	227	271	274
Drum *RPM*	32	26	22	19	17	14

V = Belt Speed (ft/min)

M/G = Motor/Gear Reducer Configuration (at rated horsepower)

High Speed Low Torque ◀ 2/S2 | 4/S2 | 6/S2 | 2/S3 | 4/S3 | 6/S3 | 2/PL2 | 4/PL2 | 6/PL2 | 2/PL3 | 4/PL3 | 6/PL3 ▶ *Low Speed High Torque*

 ©2024 *Van der Graaf Inc. All Rights Reserved.* Van der Graaf Inc. holds the rights on modifying the designs and its specifications and others noted here. E&OE.

TM100B25 Drum Motor

0.11 HP

V *(ft/min)* M/G	194 6/S2	172 6/S2	151 6/S2	118 6/PL2	105 6/PL2	99 6/PL2	88 6/PL2	74 6/PL2	71 6/PL2	62 6/PL2	55 6/PL2	46 6/PL2	37 6/PL2	29 6/PL3	24 6/PL3
Belt Pull *(lbf)*	19	21	24	31	35	36	41	49	51	58	66	79	97	125	148
Drum *RPM*	188	167	147	115	102	96	85	72	69	60	53	45	36	28	23

V *(ft/min)* M/G	22 6/PL3	18 6/PL3	15 6/PL3	13 6/PL3	11 6/PL3	9 6/PL3
Belt Pull *(lbf)*	167	200	237	267	274	274
Drum *RPM*	21	17	15	13	11	9

V = Belt Speed (ft/min)

M/G = Motor/Gear Reducer Configuration (at rated horsepower)

High Speed Low Torque ◀ 2/S2 | 4/S2 | 6/S2 | 2/S3 | 4/S3 | 6/S3 | 2/PL2 | 4/PL2 | 6/PL2 | 2/PL3 | 4/PL3 | 6/PL3 ▶ *Low Speed High Torque*

 ©2024 *Van der Graaf Inc. All Rights Reserved.* Van der Graaf Inc. holds the rights on modifying the designs and its specifications and others noted here. E&OE.

TM113B25 Drum Motor *(matching Idler KT113B25**)*

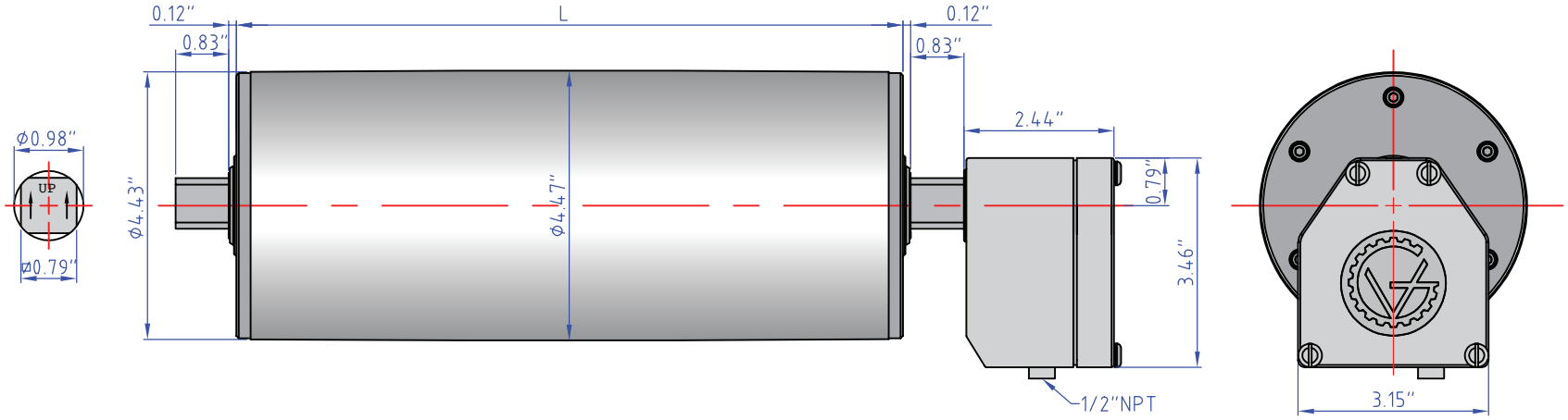

Standard drum motor face widths* (L) in inches:

10.24	10.83	12.20	14.17	16.14	18.11	20.08	22.05	24.02	25.98
27.95	29.92	31.89	33.86	35.83	37.80	39.76	41.73	43.70	45.67

**Some face widths are not available in all horsepowers. For minimum available face widths refer to page 25.*
***Idler dimensions are identical to the drum motor with no junction box.*

Brackets: 100-AB20

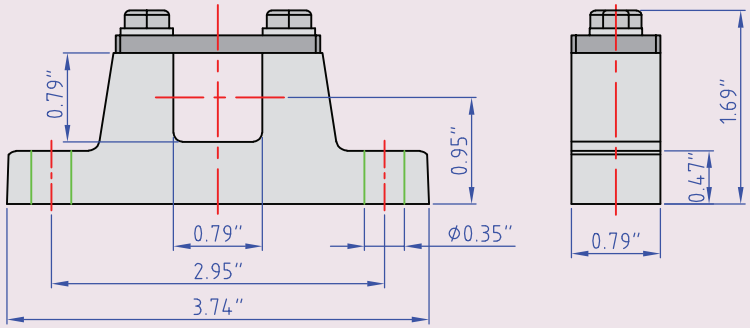

Cable Option:

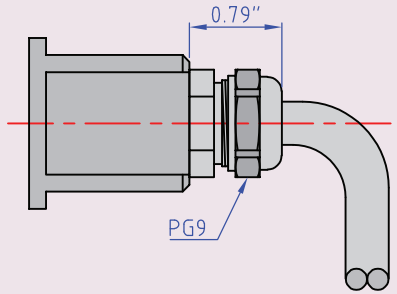

 ©2024 *Van der Graaf Inc. All Rights Reserved.* Van der Graaf Inc. holds the rights on modifying the designs and its specifications and others noted here. E&OE.

TM113B25 Drum Motor

0.75 HP

V *(ft/min)* M/G	1039 2/S2	945 2/S2	756 2/S2	661 2/S2	591 2/S2	520 2/S2	449 2/S2
Belt Pull *(lbf)*	22	24	31	35	39	45	50
Drum *RPM*	892	811	649	568	507	446	385

0.5 HP

V *(ft/min)* M/G	1039 2/PL2	945 2/S2	756 2/S2	661 2/S2	591 2/S2
Belt Pull *(lbf)*	15	17	21	23	26
Drum *RPM*	892	881	649	568	507

0.5 HP

V *(ft/min)* M/G	520 4/S2	472 4/S2	378 4/S2	331 4/S2	295 4/S2	260 4/S2	224 4/S2	201 4/PL2	177 4/S2	165 4/PL2	154 4/PL2	142 4/S2	130 4/PL2	118 4/PL2	106 4/PL2
Belt Pull *(lbf)*	30	33	41	47	52	60	69	75	88	91	98	109	116	127	141
Drum *RPM*	446	406	325	284	254	223	193	172	152	142	132	122	112	101	91

V *(ft/min)* M/G	94 4/PL2	80 4/PL2	64 4/PL2
Belt Pull *(lbf)*	161	187	215
Drum *RPM*	81	69	55

0.34 HP

V *(ft/min)* M/G	1039 2/S2	945 2/S2	756 2/S2	661 2/S2	591 2/S2
Belt Pull *(lbf)*	10	11	14	16	18
Drum *RPM*	892	811	649	568	507

0.34 HP

V *(ft/min)* M/G	520 4/S2	472 4/S2	378 4/S2	331 4/S2	295 4/S2	260 4/S2	224 4/S2	201 4/PL2	177 4/PL2	165 4/PL2	154 4/PL2	130 4/PL2	118 4/PL2	106 4/PL2	94 4/PL2
Belt Pull *(lbf)*	21	22	28	32	36	40	47	50	57	62	66	79	86	95	108
Drum *RPM*	446	406	325	284	254	223	193	172	152	142	132	112	101	91	81

V *(ft/min)* M/G	80 4/PL2	64 4/PL2
Belt Pull *(lbf)*	126	159
Drum *RPM*	69	55

V = Belt Speed (ft/min)

M/G = Motor/Gear Reducer Configuration (at rated horsepower)

High Speed Low Torque — 2/S2 | 4/S2 | 6/S2 | 2/S3 | 4/S3 | 6/S3 | 2/PL2 | 4/PL2 | 6/PL2 | 2/PL3 | 4/PL3 | 6/PL3 — *Low Speed High Torque*

 ©2024 *Van der Graaf Inc. All Rights Reserved.* Van der Graaf Inc. holds the rights on modifying the designs and its specifications and others noted here. E&OE.

TM113B25 Drum Motor

0.34 HP

V *(ft/min)* **M/G**	236 6/S2	213 6/S2	189 6/S2	165 6/S2	142 6/S2	118 6/S2	94 6/S2	69 6/PL2	59 6/PL2	50 6/PL2	40 6/PL2
Belt Pull *(lbf)*	45	50	55	64	74	89	111	149	172	205	215
Drum *RPM*	203	183	162	142	122	101	81	59	51	43	34

0.25 HP

V *(ft/min)* **M/G**	378 4/S2	331 4/S2	295 4/S2	260 4/S2	224 4/S2	201 4/PL2	177 4/PL2	165 4/PL2	154 4/PL2	130 4/PL2	118 4/PL2	106 4/PL2	94 4/PL2	80 4/PL2	64 4/PL2
Belt Pull *(lbf)*	20	22	25	29	34	36	41	44	48	56	62	69	78	91	115
Drum *RPM*	325	284	254	223	193	172	152	142	132	112	101	91	81	69	55

V *(ft/min)* **M/G**	47 4/PL3	43 4/PL3	38 4/PL3	31 4/PL3	26 4/PL3
Belt Pull *(lbf)*	148	165	185	215	215
Drum *RPM*	41	37	32	26	22

0.25 HP

V *(ft/min)* **M/G**	213 6/S2	189 6/S2	165 6/S2	142 6/S2	59 6/PL2	50 6/PL2	40 6/PL2
Belt Pull *(lbf)*	36	40	46	53	123	148	182
Drum *RPM*	183	162	142	122	51	43	34

0.16 HP

V *(ft/min)* **M/G**	260 4/S2	224 4/S2	201 4/PL2	177 4/PL2	165 4/PL2	154 4/PL2	130 4/PL2	118 4/PL2	106 4/PL2	94 4/PL2	80 4/PL2	64 4/PL2	43 4/PL3	26 4/PL3	17 4/PL3
Belt Pull *(lbf)*	20	22	24	27	30	32	37	41	46	51	61	77	109	180	215
Drum *RPM*	223	193	172	152	142	132	112	101	91	81	69	55	37	22	14

V = Belt Speed (ft/min)

M/G = Motor/Gear Reducer Configuration (at rated horsepower)

High Speed
Low Torque

2/S2 | 4/S2 | 6/S2 | 2/S3 | 4/S3 | 6/S3 | 2/PL2 | 4/PL2 | 6/PL2 | 2/PL3 | 4/PL3 | 6/PL3

Low Speed
High Torque

 ©2024 *Van der Graaf Inc. All Rights Reserved.* Van der Graaf Inc. holds the rights on modifying the designs and its specifications and others noted here. E&OE.

TM127B30 Drum Motor *(matching Idler KT127B30**)*

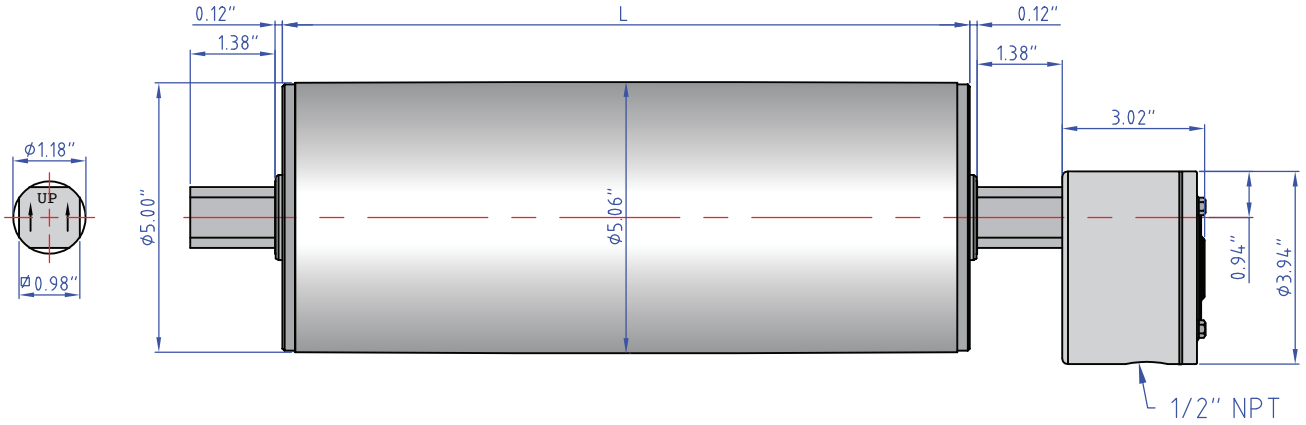

Standard drum motor face widths* (L) in inches:

10.83	11.81	13.78	15.75	17.72	19.69	21.65	23.62	25.59	27.56
29.53	31.50	33.46	35.43	37.40	39.37	41.34	43.31	45.28	47.24

**Some face widths are not available in all horsepowers. For minimum available face widths refer to page 25.*
***Idler dimensions are identical to the drum motor with no junction box.*

Brackets: 160-A30

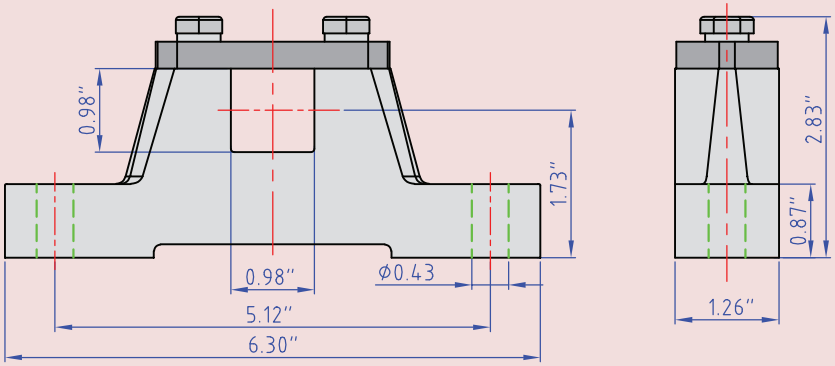

PES Cable Option:

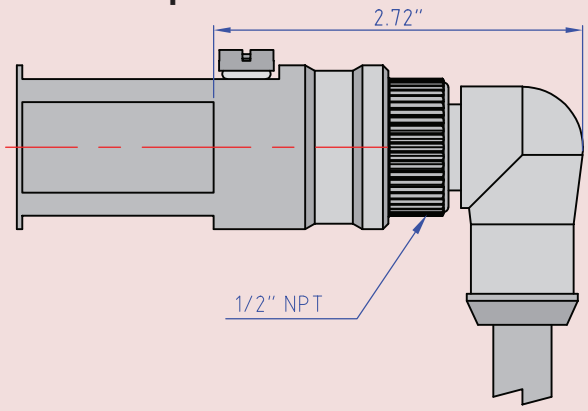

 ©2024 *Van der Graaf Inc. All Rights Reserved.* Van der Graaf Inc. holds the rights on modifying the designs and its specifications and others noted here. E&OE.

TM127B30 Drum Motor

1.5 HP

V *(ft/min)* **M/G**	316 4/S2	237 4/S2	201 4/S2	124 4/S2
Belt Pull *(lbf)*	156	207	244	396
Drum *RPM*	243	182	155	95

1.0 HP

V *(ft/min)* **M/G**	646 2/S2	484 2/S2	411 2/S2	316 4/S2	237 4/S2	201 4/S2	147 4/S2	124 4/S2	110 4/S2	73 4/PL2	58 4/PL2	49 4/PL2	38 4/PL2	
Belt Pull *(lbf)*	51	68	80	104	138	163	223	264	298	449	565	669	767	
Drum *RPM*	497	372	316	243	182	155	113	95	85	56	45	38	29	

0.75 HP

V *(ft/min)* **M/G**	651 2/S2	488 2/S2	414 2/S2	328 4/S2	246 4/S2	209 4/S2	152 4/S2	134 4/S3	114 4/S2	97 4/S2	87 6/S2	74 6/S2	62 4/S3	56 4/S3	50 4/PL2
Belt Pull *(lbf)*	38	50	59	75	100	118	162	183	216	253	282	332	366	408	491
Drum *RPM*	501	375	318	252	189	161	117	103	88	75	67	57	48	43	38

V *(ft/min)* **M/G**	40 4/PL2
Belt Pull *(lbf)*	617
Drum *RPM*	31

0.5 HP

V *(ft/min)* **M/G**	321 4/S2	241 4/S2	205 4/S2	149 4/S2	131 4/S2	98 4/S2	83 4/S2	64 6/S2	54 4/S3	41 4/S3	33 6/PL2	26 6/PL2
Belt Pull *(lbf)*	51	68	80	110	125	167	197	256	303	400	496	630
Drum *RPM*	247	185	158	115	101	75	64	49	42	32	25	20

0.34 HP

V *(ft/min)* **M/G**	322 4/S2	241 4/S2	205 4/S2	149 4/S2	131 4/S2	99 4/S2	84 4/S2	61 4/S3	54 4/S3	41 4/S3
Belt Pull *(lbf)*	35	46	54	75	85	113	133	183	206	272
Drum *RPM*	248	185	158	115	101	76	65	47	42	32

0.25 HP

V *(ft/min)* **M/G**	11.1 4/PL3	8.7 4/PL3	7.3 4/PL3	5.8 4/PL3
Belt Pull *(lbf)*	738	767	767	767
Drum *RPM*	8.5	6.7	5.6	4.5

V = Belt Speed (ft/min)

M/G = Motor/Gear Reducer Configuration (at rated horsepower)

High Speed Low Torque ◀ 2/S2 | 4/S2 | 6/S2 | 2/S3 | 4/S3 | 6/S3 | 2/PL2 | 4/PL2 | 6/PL2 | 2/PL3 | 4/PL3 | 6/PL3 ▶ *Low Speed High Torque*

 ©2024 *Van der Graaf Inc. All Rights Reserved.* Van der Graaf Inc. holds the rights on modifying the designs and its specifications and others noted here. E&OE.

TM138B30 Drum Motor *(matching Idler KT138B30**)*

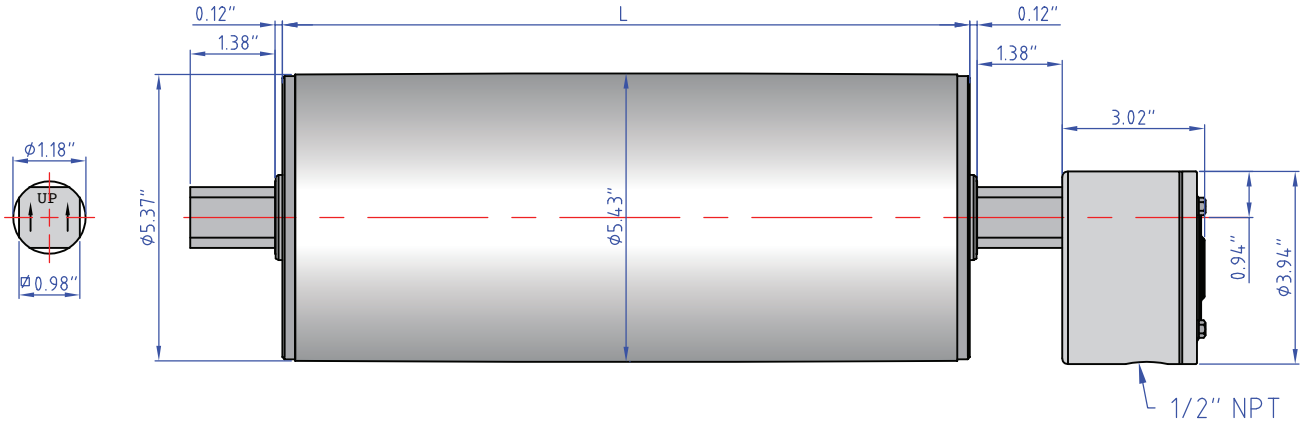

Standard drum motor face widths* (L) in inches:

10.83	11.81	13.78	15.75	17.72	19.69	21.65	23.62	25.59	27.56
29.53	31.50	33.46	35.43	37.40	39.37	41.34	43.31	45.28	47.24

**Some face widths are not available in all horsepowers. For minimum available face widths refer to page 25.*
***Idler dimensions are identical to the drum motor with no junction box.*

Brackets: 160-A30

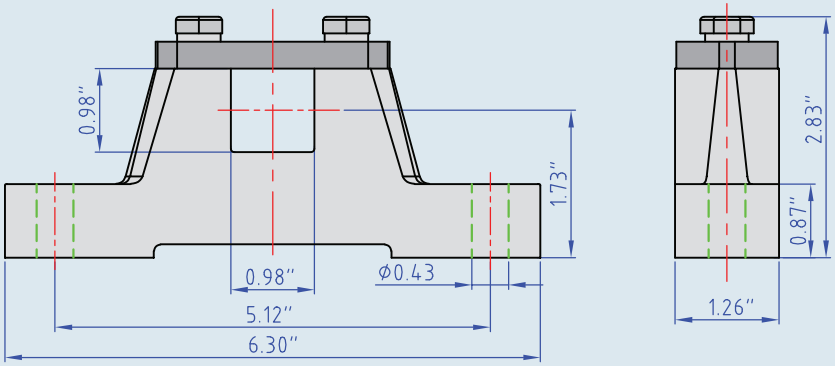

PES Cable Option:

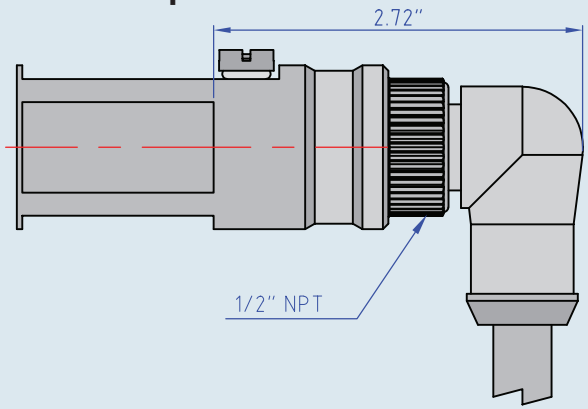

 ©2024 *Van der Graaf Inc. All Rights Reserved.* Van der Graaf Inc. holds the rights on modifying the designs and its specifications and others noted here. E&OE.

TM138B30 Drum Motor

1.5 HP

V *(ft/min)* **M/G**	343 4/S2	258 4/S2	218 4/S2	135 4/S2
Belt Pull *(lbf)*	156	208	246	398
Drum *RPM*	242	181	154	95

1.0 HP

V *(ft/min)* **M/G**	702 2/S2	526 2/S2	447 2/S2	343 4/S2	258 4/S2	218 4/S2	160 4/S2	135 4/S2	120 4/S2	79 4/PL2	63 4/PL2	53 4/PL2	41 4/PL2	
Belt Pull *(lbf)*	51	68	80	104	139	164	224	266	299	451	568	672	767	
Drum *RPM*	494	370	315	242	181	154	112	95	84	56	44	37	29	

0.75 HP

V *(ft/min)* **M/G**	707 2/S2	530 2/S2	450 2/S2	356 4/S2	267 4/S2	227 4/S2	165 4/S2	146 4/S3	124 4/S2	105 4/S2	95 6/S2	80 6/S2	67 4/S3	61 4/S3	54 4/PL2
Belt Pull *(lbf)*	38	50	59	75	100	118	162	183	216	253	282	332	366	408	491
Drum *RPM*	501	375	318	252	189	161	117	103	88	75	67	57	48	43	38

V *(ft/min)* **M/G**	43 4/PL2
Belt Pull *(lbf)*	617
Drum *RPM*	31

0.5 HP

V *(ft/min)* **M/G**	349 4/S2	262 4/S2	223 4/S2	162 4/S2	142 4/S2	106 4/S2	90 4/S2	70 6/S2	59 4/S3	45 4/S3	36 6/PL2	28 6/PL2
Belt Pull *(lbf)*	51	68	80	111	126	168	198	257	305	402	499	633
Drum *RPM*	246	184	157	114	100	75	64	49	41	31	25	20

0.34 HP

V *(ft/min)* **M/G**	350 4/S2	262 4/S2	223 4/S2	162 4/S2	142 4/S2	108 4/S2	91 4/S2	66 4/S3	59 4/S3	45 4/S3
Belt Pull *(lbf)*	35	46	55	75	85	113	133	184	207	273
Drum *RPM*	246	184	157	114	100	76	64	47	41	31

0.25 HP

V *(ft/min)* **M/G**	12 4/PL3	9 4/PL3	8 4/PL3	6 4/PL3
Belt Pull *(lbf)*	742	767	767	767
Drum *RPM*	8	7	6	4

V = Belt Speed (ft/min)

M/G = Motor/Gear Reducer Configuration (at rated horsepower)

High Speed Low Torque ◀ 2/S2 | 4/S2 | 6/S2 | 2/S3 | 4/S3 | 6/S3 | 2/PL2 | 4/PL2 | 6/PL2 | 2/PL3 | 4/PL3 | 6/PL3 ▶ *Low Speed High Torque*

 ©2024 *Van der Graaf Inc. All Rights Reserved.* Van der Graaf Inc. holds the rights on modifying the designs and its specifications and others noted here. E&OE.

TM160B40 Drum Motor *(matching Idler KT160B40**)*

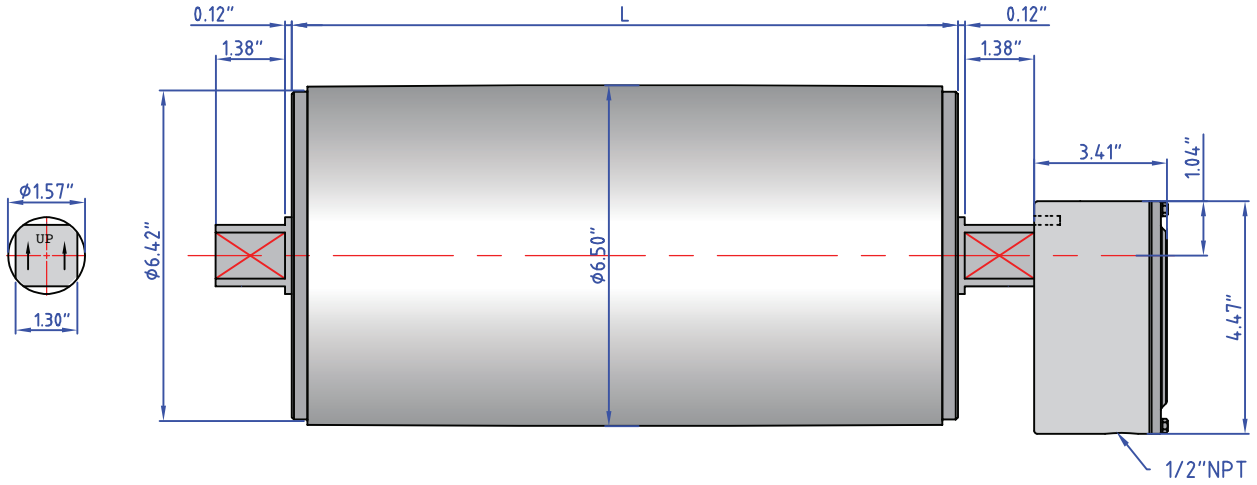

Standard drum motor face widths* (L) in inches:

15.75	16.73	17.72	19.69	21.65	23.62	25.59	27.56	29.53
31.50	33.46	35.43	37.40	39.37	41.34	43.31	45.28	47.24

**Some face widths are not available in all horsepowers. For minimum available face widths refer to page 25.*
***Idler dimensions are identical to the drum motor with no junction box.*

Brackets: 160-AB40

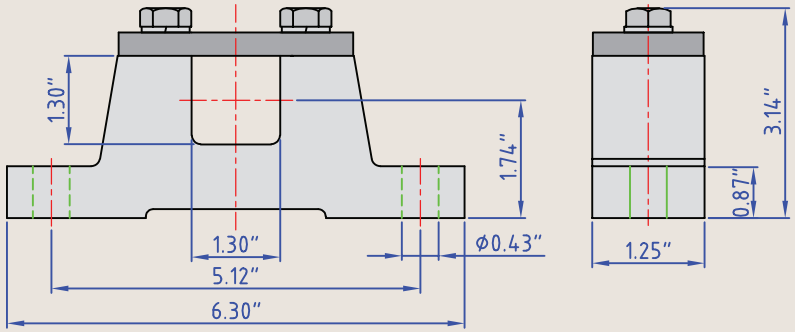

PES Cable Option:

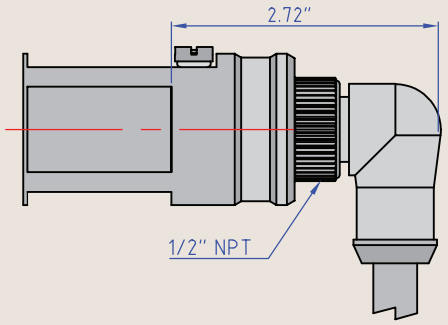

 ©2024 *Van der Graaf Inc. All Rights Reserved.* Van der Graaf Inc. holds the rights on modifying the designs and its specifications and others noted here. E&OE.

TM160B40 Drum Motor

3.0 HP

V *(ft/min)* M/G	272 2/S2	236 2/S2	213 2/S2	201 2/S2	189 2/S2
Belt Pull *(lbf)*	339	391	434	460	488
Drum *RPM*	160	139	126	119	111

2.0 HP

V *(ft/min)* M/G	272 2/S2	236 2/S2	213 2/S2	201 2/S2	189 2/S2	165 4/S2	154 4/S2	142 4/S2	130 4/S2	114 2/S3	108 2/PL2	87 2/PL2	74 4/PL2
Belt Pull *(lbf)*	232	266	296	313	333	381	410	444	484	407	580	650	800
Drum *RPM*	160	139	125	118	111	97	90	83	76	67	64	50	44

1.5 HP

V *(ft/min)* M/G	165 4/S2	154 4/S2	142 4/S2	130 4/S2	118 2/S2	106 4/S2	94 4/S2
Belt Pull *(lbf)*	280	290	333	355	391	434	489
Drum *RPM*	97	90	83	76	69	63	56

1.0 HP

V *(ft/min)* M/G	130 4/S2	118 4/S2	106 4/S2	94 4/S2	80 4/S2	73 4/S2	57 4/S3	54 4/PL2	47 4/S3	43 4/PL2
Belt Pull *(lbf)*	242	266	296	333	392	315	547	561	489	525
Drum *RPM*	76	69	63	56	47	43	33	32	28	25

***Note**: Highlighted are available with an Electromagnetic Brake unit (RTM160B40)*

V = Belt Speed (ft/min)

M/G = Motor/Gear Reducer Configuration (at rated horsepower)

High Speed Low Torque ◀ 2/S2 | 4/S2 | 6/S2 | 2/S3 | 4/S3 | 6/S3 | 2/PL2 | 4/PL2 | 6/PL2 | 2/PL3 | 4/PL3 | 6/PL3 ▶ *Low Speed High Torque*

 ©2024 *Van der Graaf Inc. All Rights Reserved.* Van der Graaf Inc. holds the rights on modifying the designs and its specifications and others noted here. E&OE.

TM215B40 Drum Motor *(matching Idler KT215B40**)*

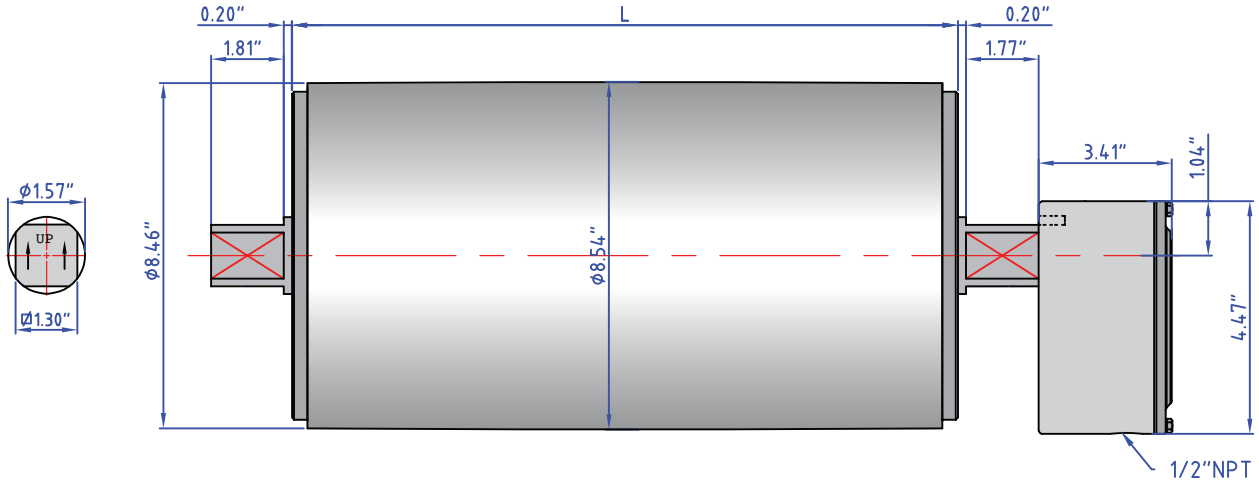

Standard drum motor face widths* (L) in inches:

19.69	21.65	23.62	25.59	27.56	29.53	31.50	33.46	35.43
37.40	39.37	41.34	43.31	45.28	47.24			

**Some face widths are not available in all horsepowers. For minimum available face widths refer to page 25.*
***Idler dimensions are identical to the drum motor with no junction box.*

Brackets: 215-AB40

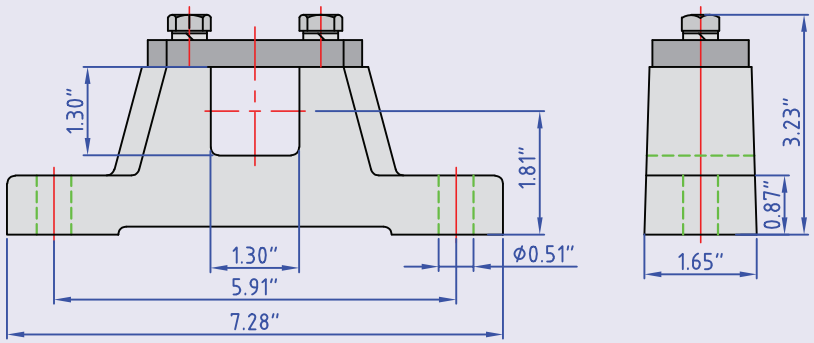

Cable Option:

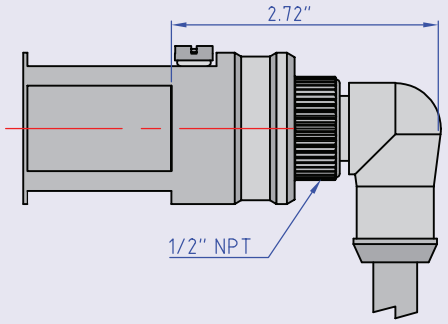

 ©2024 *Van der Graaf Inc. All Rights Reserved.* Van der Graaf Inc. holds the rights on modifying the designs and its specifications and others noted here. E&OE.

TM215B40 Drum Motor

7.5 HP

V *(ft/min)* **M/G**	1117 2/S2	912 2/S2	821 2/S2	657 2/S2	583 2/S2	547 2/S3	465 2/S2	403 2/S2	358 2/S2	335 2/S2	310 2/S2	255 2/S2	228 2/S3
Belt Pull *(lbf)*	198	243	270	337	285	405	476	549	618	662	715	651	972
Drum *RPM*	504	412	371	297	263	247	210	182	162	151	140	115	103

5.0 HP

V *(ft/min)* **M/G**	1117 2/S2	912 2/S2	821 2/S2	657 2/S2	583 2/S2	547 2/S3	465 2/S2	403 2/S2	358 2/S2	335 2/S2	310 2/S2	275 4/S3	255 2/S2	238 2/S2	234 4/S2
Belt Pull *(lbf)*	145	178	198	247	278	297	349	402	453	485	524	521	636	681	613
Drum *RPM*	503	411	370	296	263	246	209	182	161	151	140	124	115	107	105

V *(ft/min)* **M/G**	228 2/S3	221 2/S2	202 4/S3	198 2/S3	162 2/S3	114 4/S3
Belt Pull *(lbf)*	712	552	709	821	1000	1250
Drum *RPM*	103	100	91	89	73	51

3.0 HP

V *(ft/min)* **M/G**	679 4/S2	559 4/S2	483 4/S2	398 4/S2	325 4/S2	293 4/S2	233 4/S2	234 4/S2	208 4/S2	202 4/S2	166 4/S2	155 4/S2	144 4/S2	128 4/S2	119 4/S2
Belt Pull *(lbf)*	130	158	183	222	272	302	379	377	425	437	533	569	614	692	741
Drum *RPM*	307	253	218	180	147	132	105	106	94	91	75	70	65	58	54

V *(ft/min)* **M/G**	114 4/S3	99 4/S3	81 4/S3	70 4/S3	63 4/S3
Belt Pull *(lbf)*	774	893	1087	1254	1412
Drum *RPM*	52	45	37	32	28

2.0 HP

V *(ft/min)* **M/G**	685 4/S2	564 4/S2	488 4/S2	402 4/S2	376 6/S2	328 4/S2	295 4/S2	236 4/S2	210 4/S2	204 4/S2	197 6/S2	185 4/S2	167 4/S2	157 6/S2	145 4/S2
Belt Pull *(lbf)*	82	99	115	140	164	171	190	237	267	275	314	304	335	394	386
Drum *RPM*	309	255	220	181	170	148	133	107	95	92	89	83	76	71	65

V *(ft/min)* **M/G**	136 6/S2	129 4/S2	120 4/S2	111 4/S2	104 6/S2	97 6/S2	86 6/S2	77 6/S3	71 4/S3	67 6/S3	55 6/S3	47 6/S3
Belt Pull *(lbf)*	455	435	466	503	592	639	719	805	789	928	1131	1304
Drum *RPM*	61	58	54	50	47	44	39	35	32	30	25	21

V = Belt Speed (ft/min)

M/G = Motor/Gear Reducer Configuration (at rated horsepower)

High Speed Low Torque ◀ 2/S2 | 4/S2 | 6/S2 | 2/S3 | 4/S3 | 6/S3 | 2/PL2 | 4/PL2 | 6/PL2 | 2/PL3 | 4/PL3 | 6/PL3 ▶ *Low Speed High Torque*

 ©2024 *Van der Graaf Inc. All Rights Reserved.* Van der Graaf Inc. holds the rights on modifying the designs and its specifications and others noted here. E&OE.

TM215B50 Drum Motor *(matching Idler KT215B50**)*

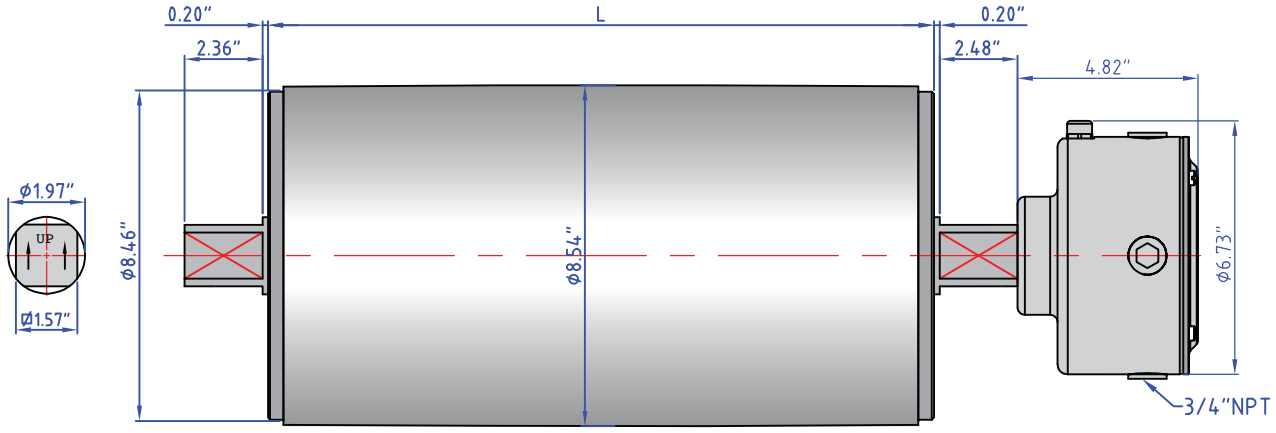

Standard drum motor face widths* (L) in inches:

19.69	21.65	23.62	25.59	27.56	29.53	31.50	33.46	35.43
37.40	39.37	41.34	43.31	45.28	47.24			

**Some face widths are not available in all horsepowers. For minimum available face widths refer to page 25.*
***Idler dimensions are identical to the drum motor with no junction box.*

Brackets: 215-AB50

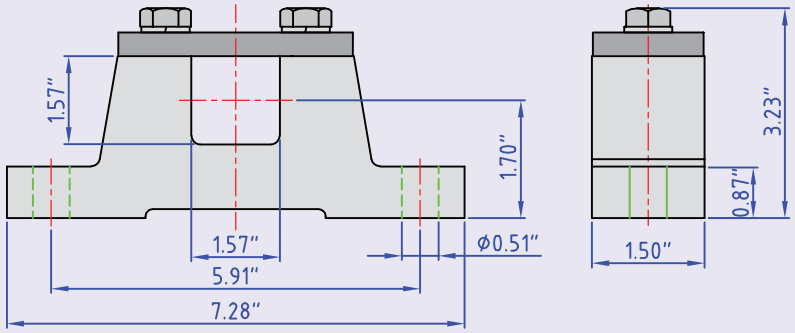

Cable Option:

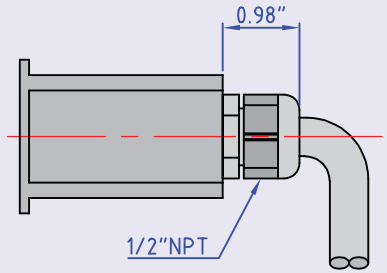

 ©2024 *Van der Graaf Inc. All Rights Reserved.* Van der Graaf Inc. holds the rights on modifying the designs and its specifications and others noted here. E&OE.

TM215B50 Drum Motor

7.5 HP

V *(ft/min)* **M/G**	**142** 2/PL2	**129** 2/PL2		
Belt Pull *(lbf)*	**1559**	**1714**		
Drum *RPM*	**64**	**58**		

5.0 HP

V *(ft/min)* **M/G**	**142** 2/PL2	**129** 2/PL2	**71** 4/PL2	**65** 4/PL2
Belt Pull *(lbf)*	**1275**	**1403**	**2317**	**2531**
Drum *RPM*	**64**	**58**	**32**	**29**

3.0 HP

V *(ft/min)* **M/G**	**71** 4/PL2	**65** 4/PL2	**47** 6/PL2	**43** 6/PL2
Belt Pull *(lbf)*	**1241**	**1365**	**1887**	**2075**
Drum *RPM*	**32**	**29**	**21**	**19**

2.0 HP

V *(ft/min)* **M/G**	**48** 6/PL2	**44** 6/PL2		
Belt Pull *(lbf)*	**1291**	**1419**		
Drum *RPM*	**22**	**20**		

V = Belt Speed (ft/min)

M/G = Motor/Gear Reducer Configuration (at rated horsepower)

High Speed Low Torque ◀ 2/S2 | 4/S2 | 6/S2 | 2/S3 | 4/S3 | 6/S3 | 2/PL2 | 4/PL2 | 6/PL2 | 2/PL3 | 4/PL3 | 6/PL3 ▶ *Low Speed High Torque*

 ©2024 *Van der Graaf Inc. All Rights Reserved.* Van der Graaf Inc. holds the rights on modifying the designs and its specifications and others noted here. E&OE.

TM315B50 Drum Motor *(matching Idler KT315B50**)*

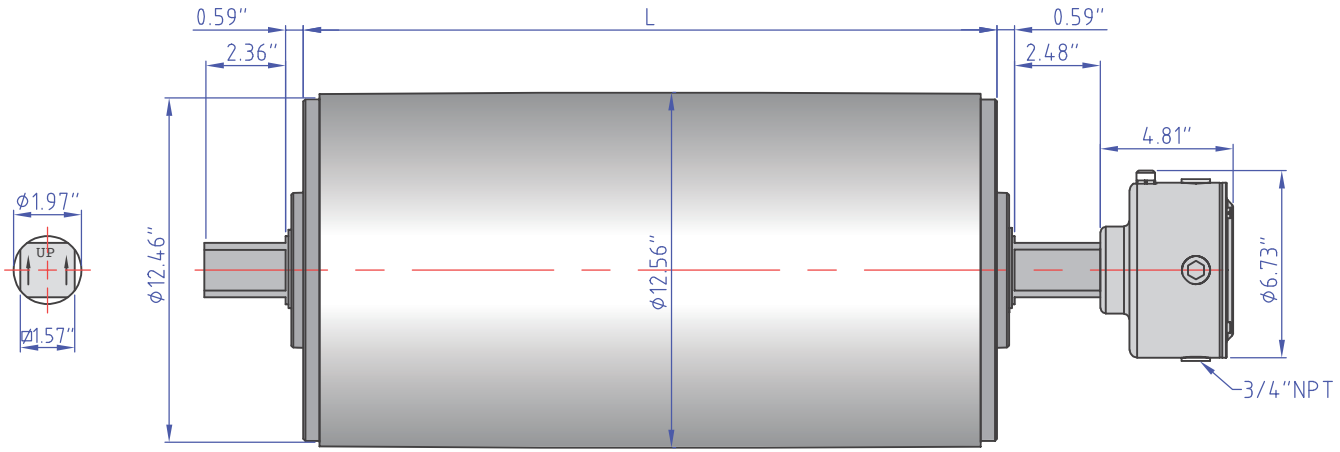

Standard drum motor face widths* (L) in inches:

21.65	23.62	25.59	27.56	29.53	31.50	33.46	35.43	37.40
39.37	41.34	43.31	45.28	47.24	49.21	51.18	53.15	55.12

**Some face widths are not available in all horsepowers. For minimum available face widths refer to page 25.*
***Idler dimensions are identical to the drum motor with no junction box.*

Brackets: 315-AB-50

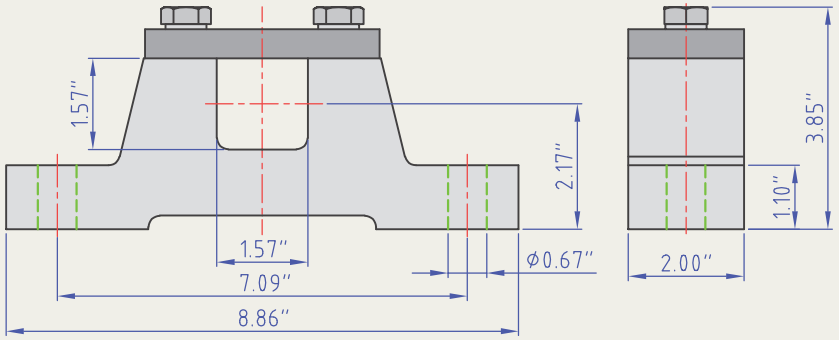

 ©2024 *Van der Graaf Inc. All Rights Reserved.* Van der Graaf Inc. holds the rights on modifying the designs and its specifications and others noted here. E&OE.

TM315B50 Drum Motor

15.0 HP

V *(ft/min)* M/G	661 2/S2	591 2/S2	567 2/S2	520 2/S2	449 2/S2	378 2/S2
Belt Pull *(lbf)*	698	782	814	888	1029	1185
Drum *RPM*	204	182	175	160	138	116

10.0 HP

V *(ft/min)* M/G	638 4/S2	567 4/S2	520 4/S2	449 4/S2	402 4/S2	354 4/S2	331 4/S2	295 4/S2	283 4/S2	260 4/S2
Belt Pull *(lbf)*	493	555	606	701	784	888	952	1066	1110	1211
Drum *RPM*	197	175	160	138	124	109	102	91	87	80

7.5 HP

V *(ft/min)* M/G	638 4/S2	567 4/S2	520 4/S2	449 4/S2	402 4/S2	354 4/S2	331 4/S2	295 4/S2	268 4/S2	260 4/S2	224 4/S2	189 4/S2
Belt Pull *(lbf)*	362	407	444	514	575	651	698	782	814	888	1029	1185
Drum *RPM*	197	175	160	138	124	109	102	91	83	80	69	58

5.0 HP

V *(ft/min)* M/G	638 4/S2	567 4/S2	543 4/S2	449 4/S2	402 4/S2	354 4/S2	331 4/S2	283 4/S2	268 4/S2	213 4/S2	189 4/S2	165 4/S2	154 4/S2	142 4/S2	130 4/S2
Belt Pull *(lbf)*	245	276	288	349	390	442	473	552	602	736	790	947	1019	1104	1205
Drum *RPM*	197	175	167	138	124	109	102	87	83	66	58	51	47	44	40

V = Belt Speed (ft/min)

M/G = Motor/Gear Reducer Configuration (at rated horsepower)

High Speed Low Torque ◀ 2/S2 | 4/S2 | 6/S2 | 2/S3 | 4/S3 | 6/S3 | 2/PL2 | 4/PL2 | 6/PL2 | 2/PL3 | 4/PL3 | 6/PL3 ▶ *Low Speed High Torque*

 ©2024 *Van der Graaf Inc. All Rights Reserved.* Van der Graaf Inc. holds the rights on modifying the designs and its specifications and others noted here. E&OE.

TM315B60 Drum Motor *(matching Idler KT315B60**)*

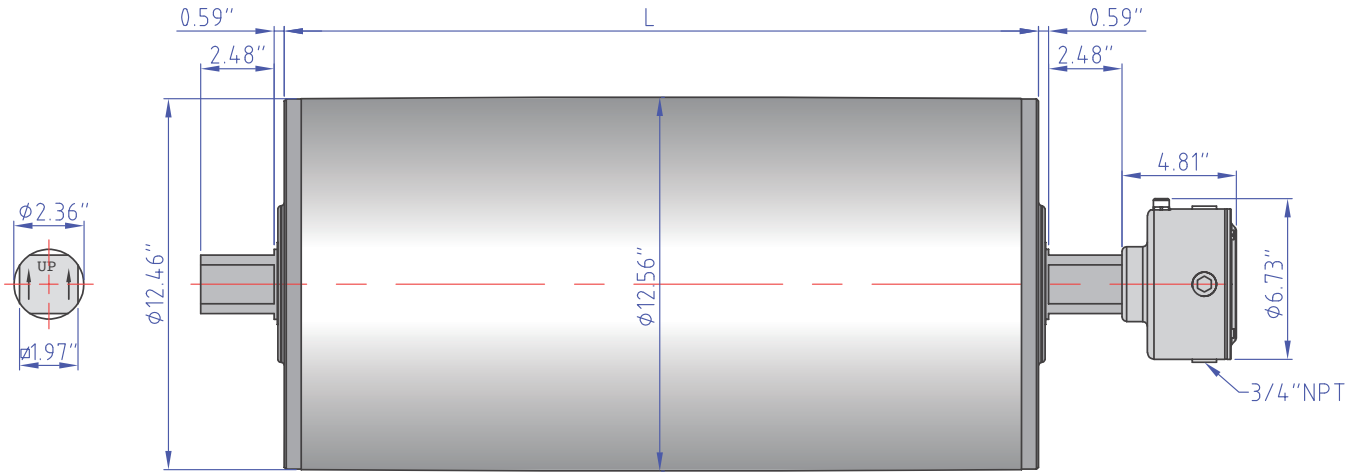

Standard drum motor face widths* (L) in inches:

21.65	23.62	25.59	27.56	29.53	31.50	33.46	35.43	37.40
39.37	41.34	43.31	45.28	47.24	49.21	51.18	53.15	55.12

**Some face widths are not available in all horsepowers. For minimum available face widths refer to page 25.*
***Idler dimensions are identical to the drum motor with no junction box.*

Brackets: 315-AB-60

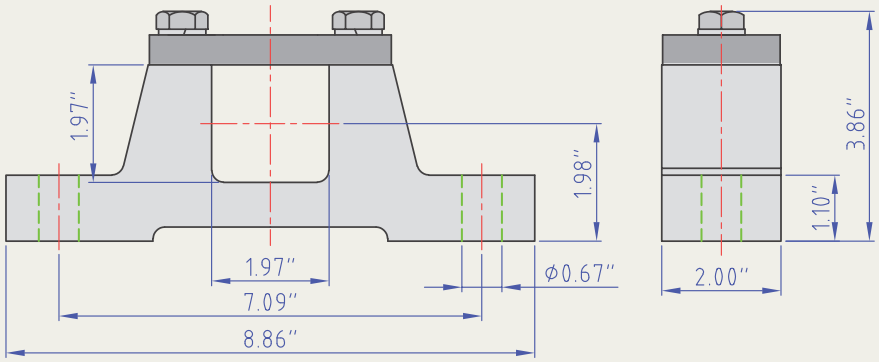

 ©2024 *Van der Graaf Inc. All Rights Reserved.* Van der Graaf Inc. holds the rights on modifying the designs and its specifications and others noted here. E&OE.

TM315B60 Drum Motor

15.0 HP

V *(ft/min)* M/G	402 2/S3	335 2/S3	281 2/S3	272 2/S3	236 2/S3	189 2/S3
Belt Pull *(lbf)*	1095	1309	1560	1626	1866	2312
Drum *RPM*	124	103	87	84	73	58

10.0 HP

V *(ft/min)* M/G	201 4/S3	170 4/S3	142 4/S3
Belt Pull *(lbf)*	1470	1760	2100
Drum *RPM*	62	52	44

7.5 HP

V *(ft/min)* M/G	201 4/S3	168 4/S3	142 4/S3	135 4/S3	118 4/S3	107 4/S3	94 4/S3
Belt Pull *(lbf)*	1095	1309	1560	1626	1866	2128	2312
Drum *RPM*	62	52	44	42	36	32	29

5.0 HP

V *(ft/min)* M/G	118 4/S3	107 4/S3	94 4/S3	76 4/S3
Belt Pull *(lbf)*	1275	1418	1594	1922
Drum *RPM*	36	32	29	23

V = Belt Speed (ft/min)

M/G = Motor/Gear Reducer Configuration (at rated horsepower)

High Speed Low Torque — 2/S2 | 4/S2 | 6/S2 | 2/S3 | 4/S3 | 6/S3 | 2/PL2 | 4/PL2 | 6/PL2 | 2/PL3 | 4/PL3 | 6/PL3 — *Low Speed High Torque*

 ©2024 *Van der Graaf Inc. All Rights Reserved.* Van der Graaf Inc. holds the rights on modifying the designs and its specifications and others noted here. E&OE.

TM315A75 Drum Motor *(matching Idler KT315A75**)*

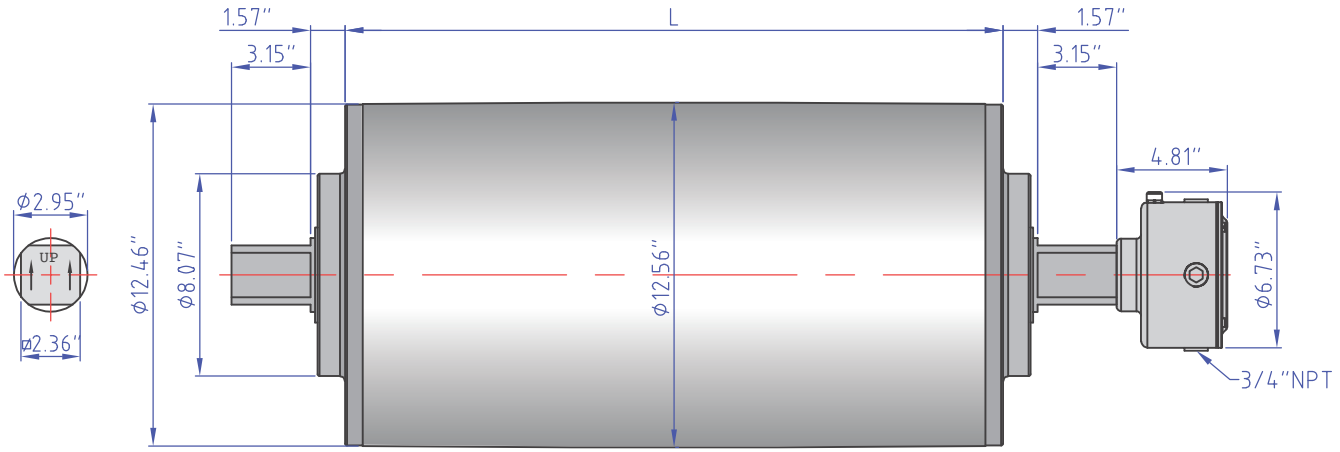

Standard drum motor face widths* (L) in inches:

33.46 35.43 37.40 39.37 41.34 43.31 45.28 47.24 49.21 51.18 53.15 55.12

**Some face widths are not available in all horsepowers. For minimum available face widths refer to page 25.*
***Idler dimensions are identical to the drum motor with no junction box.*

Brackets: 500-AB-75

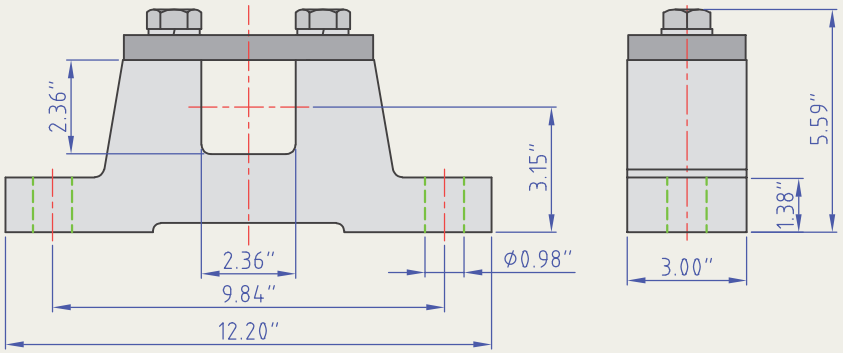

 ©2024 *Van der Graaf Inc. All Rights Reserved.* Van der Graaf Inc. holds the rights on modifying the designs and its specifications and others noted here. E&OE.

TM315A75 Drum Motor

15.0 HP

V *(ft/min)* M/G	100 2/PL3	80 2/PL3	
Belt Pull *(lbf)*	4500	5700	
Drum *RPM*	31	25	

10.0 HP

V *(ft/min)* M/G	50 4/PL3	40 4/PL3	30 4/PL3
Belt Pull *(lbf)*	6087	7600	11000
Drum *RPM*	15	12	9

V = Belt Speed (ft/min)

M/G = Motor/Gear Reducer Configuration (at rated horsepower)

High Speed Low Torque ◀ 2/S2 4/S2 6/S2 2/S3 4/S3 6/S3 2/PL2 4/PL2 6/PL2 2/PL3 4/PL3 6/PL3 ▶ *Low Speed High Torque*

 ©2024 *Van der Graaf Inc. All Rights Reserved.* Van der Graaf Inc. holds the rights on modifying the designs and its specifications and others noted here. E&OE.

MINIMUM FACE WIDTH (L IN INCHES)

TM100B25

HP	0.25			0.16						0.14		
Motor/Gear Reducer	4/S2	4/PL2	4/PL3	4/S2	4/PL2	4/PL3	6/S2	6/PL2	6/PL3	4/S2	4/PL2	4/PL3
Min. Face Width (L)	12.20	12.20	14.17	12.20	12.20	14.17	12.20	12.20	14.17	10.24	10.24	12.20

TM113B25

HP	0.75	0.5			0.34					0.25		
Motor/Gear Reducer	2/S2	2/S2	4/S2	4/PL2	2/S2	4/S2	4/PL2	6/S2	6/PL2	4/S2	4/PL2	4/PL3
Min. Face Width (L)	12.20	12.20	14.17	14.17	10.24	12.20	12.20	14.17	14.17	12.20	12.20	14.17

TM127B30 / TM138B30

HP	1.5	1.0			0.75					0.5					0.34		0.25	
Motor/Gear Reducer	4/S2	2/S2	4/S2	4/PL2	2/S2	6/S2	4/S2	4/S3	4/PL2	6/S2	4/S2	4/S3	4/PL2	6/PL2	4/S2	4/S3	4/PL3	
Min. Face Width (L)	14.76	13.78	13.78	15.75	12.80	13.78	12.80	13.78	14.76	12.80	12.80	13.78	14.76	14.76	11.81	12.80	15.75	

TM160B40

HP	3.0	2.0			1.5	1.0			0.75		
Motor/Gear Reducer	2/S2	2/S2	4/S2	2/PL2	4/PL2	4/S2	4/S2	4/S3	4/PL2	4/S2	4/S3	4/PL2
Min. Face Width (L)	16.73	15.75	17.72	17.72	17.72	15.75	15.75	16.73	17.72	15.75	16.73	17.72

TM215B40 / TM215B50

HP	7.5			5.0						3.0				2.0				
Motor/Gear Reducer	2/S2	2/S3	2/PL2	2/S2	2/S3	2/PL2	4/S2	4/S3	4/PL2	4/S2	4/S3	4/PL2	6/PL2	4/S2	6/S2	4/S3	6/S3	6/PL2
Min. Face Width (L)	21.65	23.62	23.62	21.65	23.62	23.62	21.65	23.62	23.62	19.69	21.65	23.62	23.62	19.69	21.65	21.65	23.62	23.62

TM315B50 /B60 /A75

HP	15			10			7.5		5.0	
Motor/Gear Reducer	2/S2	2/S3	2/PL3	4/S2	4/S3	4/PL3	4/S2	4/S3	4/S2	4/S3
Min. Face Width (L)	25.59	29.53	33.46	25.59	29.53	33.46	23.62	27.56	21.65	25.59

 ©2024 *Van der Graaf Inc. All Rights Reserved.* Van der Graaf Inc. holds the rights on modifying the designs and its specifications and others noted here. E&OE.

BELT PULL CALCULATIONS

CONVEYING SYSTEM	F_0  Force without Load	F_1  Force to Convey Materials Horizontally	F_2 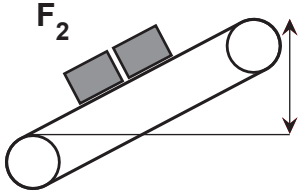 Force to Convey Materials on Incline
Roller Bed Conveyor R 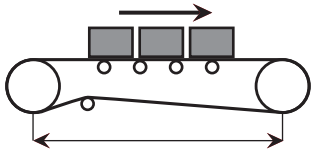	$F_0 = 0.04\ (2P + Q)\ L$	$F_1 = 0.04 \times R \times L$	$F_2 = R \times H$
Slider Bed Conveyor R 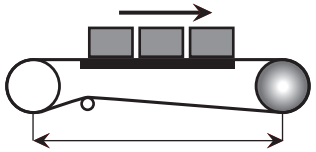	$F_0 = 1.1 \times P \times L \times C$	$F_1 = 1.1 \times R \times L \times C$	$F_2 = R \times H$

BELT PULL (BP)

$$BP = (F_0 + F_1 + F_2)$$

F = Force (lbs.)

P = Belt weight (lbs./linear ft.)

Q = Weight of rotating parts in pounds per foot of length of belt conveyor

R = Weight in pounds of conveyor product per foot of belt conveyor length

C = Co-efficient of friction between conveyor belt and top slider bed

L = Center to center length (feet)

H = Height (feet)

Calculations:

 ©2024 *Van der Graaf Inc. All Rights Reserved.* Van der Graaf Inc. holds the rights on modifying the designs and its specifications and others noted here. E&OE.

NOTES



Canada



USA



Netherlands

VDG (Van der Graaf) has provided conveyor drive solutions to the material handling and processing industries for over half a century. VDG continues as the leader in the design and manufacturing of drum motors by consistently investing in research and development and utilizing cutting-edge production technology and automation. With in-house precision manufacturing, VDG ensures product quality, fast delivery, and superior customer support.

VDG adheres to high quality standards and a simple principle: design a superior product to meet customer needs in a changing marketplace.

600-01 v4 (12/2024) ©2024 *Van der Graaf Inc. All Rights Reserved.*