VDG
Van der Graaf



Drum Motor

Installation Manual

Table of Contents

Installation Instructions 2

Electrical Connection 2

Drum Motor with Profiled Sleeve
Exchange Procedure 3

Drum Motor with CleanFlow™ Sprockets
Assembly Procedure 4

Connection Diagrams:

- Single Voltage - Three Phase. 5
- Dual Voltage - Three Phase (Star/Delta) 5
- Dual Voltage - Three Phase (240/480 volts) 6
- Single Phase (110 volts). 6
- Single Phase (220 volts) 7
- Three Phase with Brake (RTM) 7
- Three Phase (240 volts) with Brake (RTM) 8
- Three Phase (480 volts) with Brake (RTM) 8

Connecting a Drum Motor Equipped with a
Backstop (TB) Device. 9

Releasing & Engaging a Drum Motor Equipped with a
Manual Release Backstop (MRB) Device 10

Oil Change Instructions 11

Oil Types 12

Drum Motor Oil Content . . . . . 13 - 14

Troubleshooting 15

INSTALLING THE DRUM MOTOR:

The Drum Motor MUST be mounted horizontally, square to the conveyor frame and parallel to the idler pulley. The arrow on the shaft opposite the junction box MUST be pointing up, with no more than 30 degrees off of vertical. This will ensure that the gear reducer is properly lubricated. For special mounting arrangements, consult your Van der Graaf (VDG) representative.

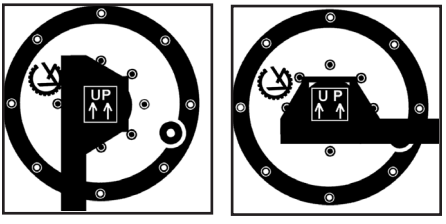

NOTE: The Drum Motor has been factory filled with the correct amount and type of oil, and does not require any additional oil.

ELECTRICAL CONNECTION:

To ensure proper electrical connection, always reference the connection diagrams provided (see pages 4-8). Be sure to use qualified personnel and observe compliance with local electrical codes. If in doubt, consult your Van der Graaf representative. Ensure that the motor is being installed with the appropriate overload protection device(s), (fuse, breakers, thermal overload protection {GV-THERM}) if equipped. Reference the Drum Motor nameplate to determine allowable full load amperage.

When the motor is equipped with a backstop (TB) device, the motor must be connected electrically according to the correct rotational direction (see page 9 for complete instructions).

PRIOR TO STARTING:

1. Be sure that the Drum Motor is correctly connected and supplied with the rated voltage.
2. Check that the Drum Motor and conveyor belt are unobstructed and free to rotate.

CAUTION: Never over tension the conveyor belt as internal damage may occur.

Drum Motor with Profiled Sleeve Exchange Procedure

1. Remove the six screws and washers (1) from the end shaft side of the drum motor, opposite junction box (4).
2. Slide the profiled sleeve off the drum motor.
3. Check the O-rings are in good condition and clean.
4. Slide on the new profiled sleeve (XP) on the drum motor.
5. Apply to each screw (1), one drop of Threadlocker and tighten screws to 15Nm (11 lbs-ft).

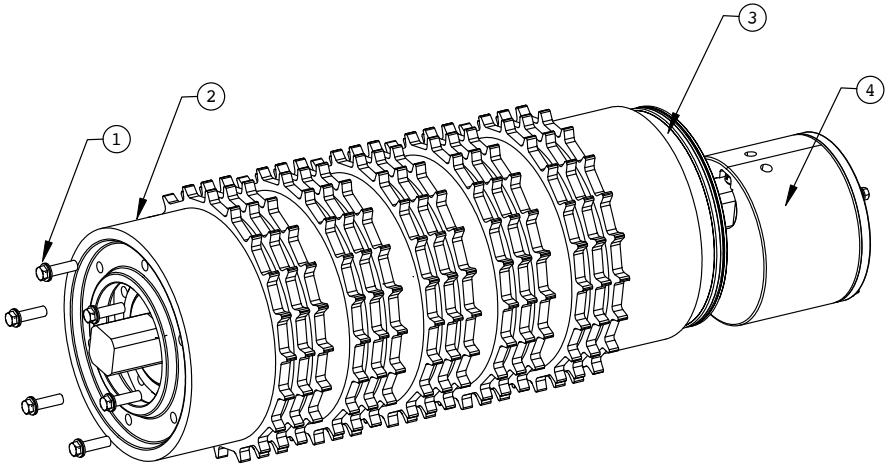

Parts Required		
Item #	**Qty.**	**Description**
1	6	Stainless Steel M6 Flanged Screws w/Sealing Washer
2	1	Profiled Sleeve
3	1	Drum Motor
4	1	Junction Box

F306-02 (09/2023)

Drum Motor with CleanFlow™ Sprockets Assembly Procedure

1. Align Pin Slot in Sprocket (3) to the welded pin (2) on the drum (1).
2. Slide Sprocket (3) over the Drum Motor (1).
3. Insert Set Screw (4) in their respected holes.
4. Repeat the sequence for the balance of the Sprockets.
5. Space Sprockets on the face of the drum to match belt pockets.
6. Lock center Sprocket/s by lightly tightening set screws.

IMPORTANT NOTE:

- **Observe not to deform the sprocket by excessively tightening set screws.**
- **Ensure that locked Sprockets in head and tail pulleys are corresponding to the same pockets in the belt.**

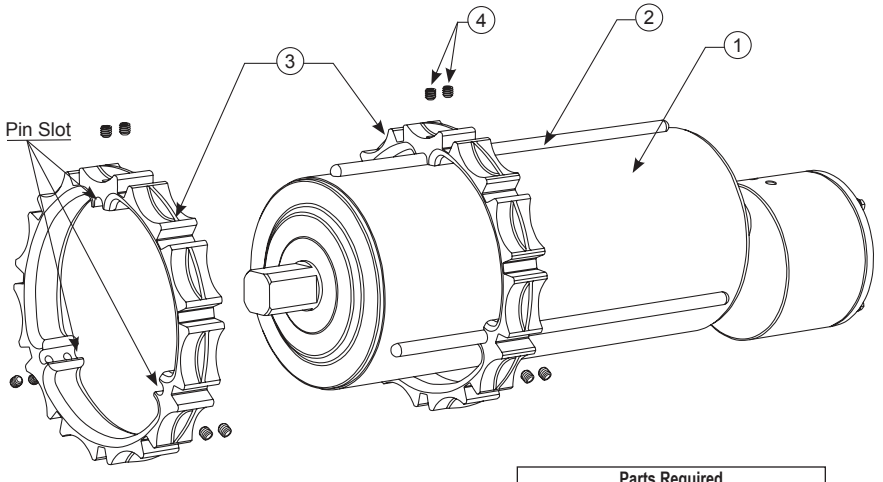

Parts Required	
Item #	**Description**
1	Drum Motor
2	Welded Pins
3	Sprockets
4	Set Screws

F306-00 (05/2026)

SINGLE VOLTAGE - THREE PHASE

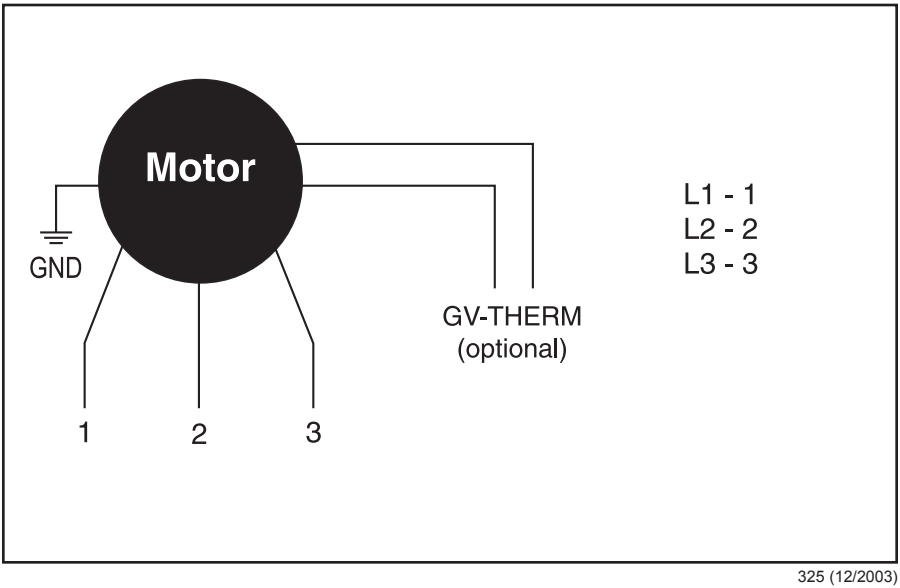

325 (12/2003)

DUAL VOLTAGE - THREE PHASE (STAR/DELTA)

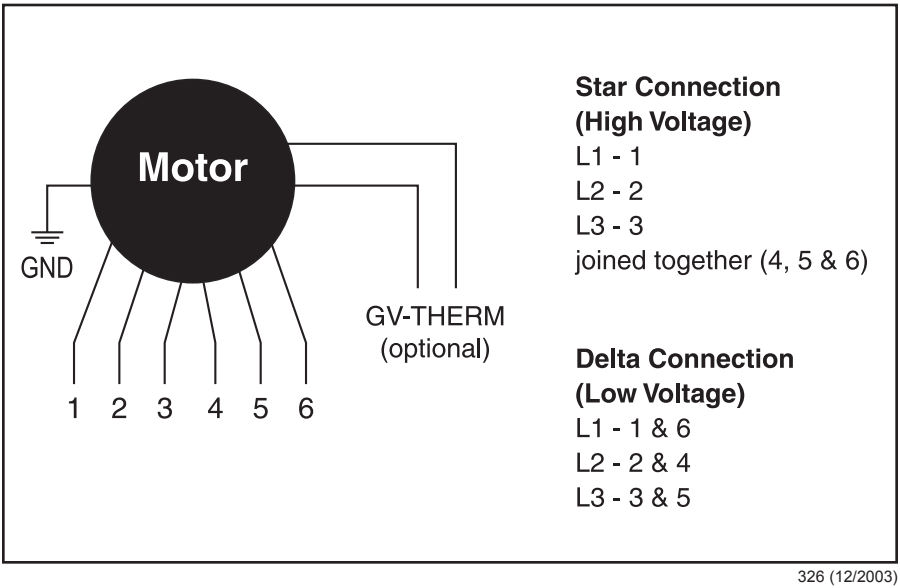

326 (12/2003)

DUAL VOLTAGE - THREE PHASE (240/480 VOLTS)

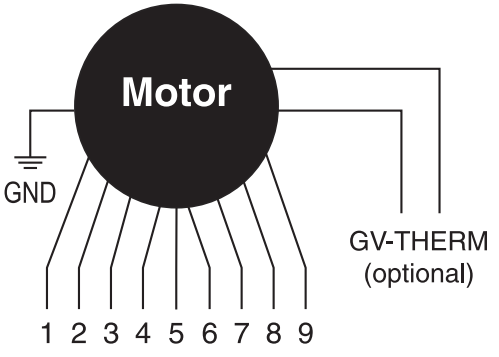

Low Voltage Connection
L1 - 1 & 7
L2 - 2 & 8
L3 - 3 & 9
joined together (4, 5 & 6)

High Voltage Connection
L1 - 1
L2 - 2
L3 - 3
joined together
(4 & 7), (5 & 8), (6 & 9)

327 (12/2003)

SINGLE PHASE (110 VOLTS)

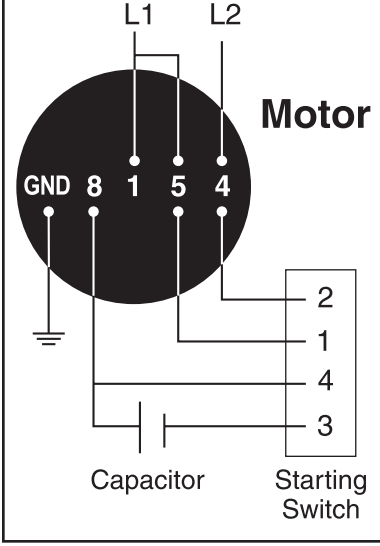

To reverse direction, interchange motor leads 5 and 8.

NOTE

This motor is designed to be operated with a conveyor belt. Bench testing may result in excessive noise. The noise in no way effects the performance of this motor.

328 (12/2003)

SINGLE PHASE (220 VOLTS)

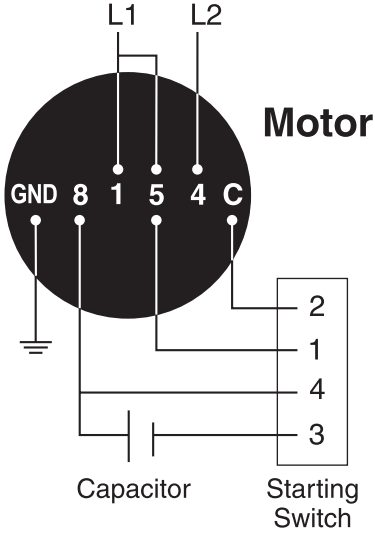

To reverse direction, interchange motor leads 5 and 8.

NOTE

This motor is designed to be operated with a conveyor belt. Bench testing may result in excessive noise. The noise in no way effects the performance of this motor.

329 (12/2003)

THREE PHASE WITH BRAKE (RTM)

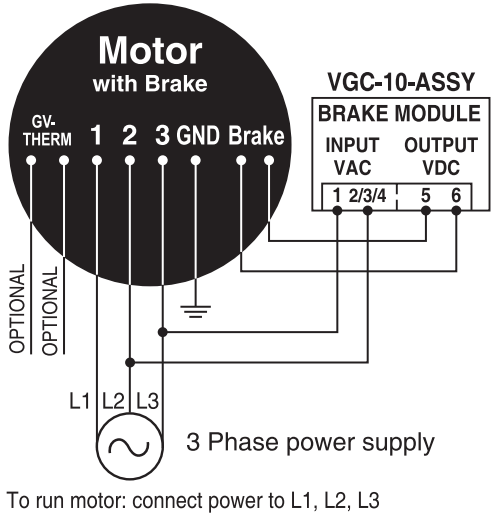

To run motor: connect power to L1, L2, L3
To stop motor: disconnect power to L1, L2, L3

INSTALLATION NOTES:
To reverse direction interchange motor leads 2 & 3.

When wired with a soft starter or variable frequency drive (VFD), consult your local Van der Graaf representative for wiring instructions.

Please Note: Improper operation with a soft starter or variable frequency drive could result in motor failure.

For maximum cycling rates & timing requirements, contact your local Van der Graaf Representative.

330_VGC10 (04/2006)

THREE PHASE (240 VOLTS) WITH BRAKE (RTM)

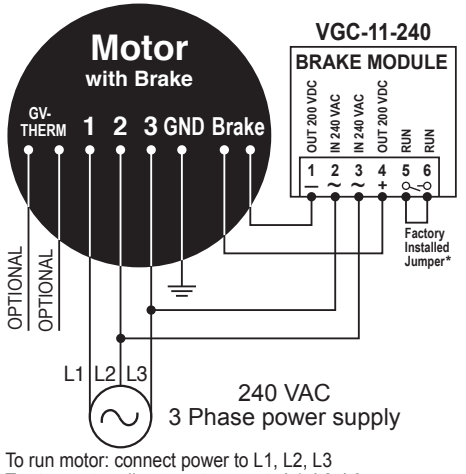

To run motor: connect power to L1, L2, L3
To stop motor: disconnect power to L1, L2, L3
*Factory Jumper must be installed.

INSTALLATION NOTES:
To reverse direction interchange motor leads 2 & 3.

When wired with a soft starter or variable frequency drive (VFD), consult your local Van der Graaf representative for wiring instructions.

Please Note: Improper operation with a soft starter or variable frequency drive could result in motor failure.

For maximum cycling rates & timing requirements, contact your local Van der Graaf Representative.

330_VGC11-240 (01/2014)

THREE PHASE (480 VOLTS) WITH BRAKE (RTM)

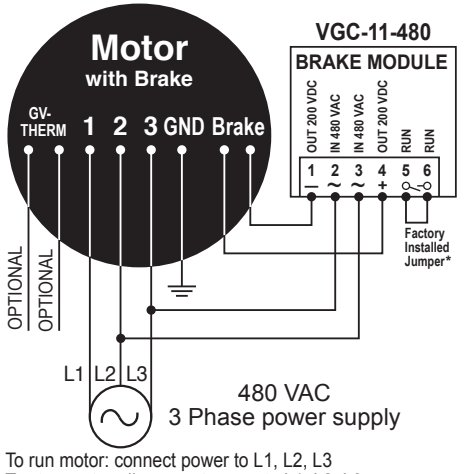

To run motor: connect power to L1, L2, L3
To stop motor: disconnect power to L1, L2, L3
*Factory Jumper must be installed.

INSTALLATION NOTES:
To reverse direction interchange motor leads 2 & 3.

When wired with a soft starter or variable frequency drive (VFD), consult your local Van der Graaf representative for wiring instructions.

Please Note: Improper operation with a soft starter or variable frequency drive could result in motor failure.

For maximum cycling rates & timing requirements, contact your local Van der Graaf Representative.

330_VGC11-480 (01/2014)

Connecting a Drum Motor Equipped with a Backstop (TB) Device

1. Look for the brass arrow on the end flange. It will indicate which direction the drum motor will rotate.

2. Mark the three incoming power supply leads with numbers L1, L2, L3. Ensure that the ground lead is properly connected to the ground.

3. Connect the incoming power supply leads:
L1 to motor lead #1
L2 to motor lead #2
L3 to motor lead #3

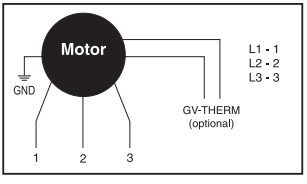

4. Turn the power to the motor ON and OFF, (no more than 0.5 second on the ON position). If the motor rotates then the connection is correct and you can proceed to step 5. If the motor does not rotate, interchange any of the two power supply leads.
Example: L1 to motor lead #2
L2 to motor lead #1

Turn the power ON and the motor should rotate in the correct direction. Change the markings on the incoming power supply leads to correspond with the motor leads.
Example: L2 to be changed to L1 and
L1 to be changed to L2.

Before Step 4 is complete, the motor should be running in the correct rotation and the connection should be as follows:

Power supply		Motor Leads
L1	to	1
L2	to	2
L3	to	3

When that is completed, proceed to step 5.

5. Finalize the motor connection:

Power supply		Motor Leads
L1	to	1
L2	to	2
L3	to	3

6. Turn ON the motor.

331 (02/2000)

Releasing & Engaging a Drum Motor Equipped with a Manual Release Backstop (MRB) Device

NOTE: The drum motor is shipped with the Backstop device engaged.

To Release the Backstop Feature:

1. Bring the drum motor to full stop and disconnect power.

2. Remove the shaft cap located on the shaft end, opposite the junction box or cable entry.

3. Using a 10mm deep socket 1/4” drive and a ratchet; insert socket into the shaft and turn clockwise until the end, approximately 15 turns and allow motor to rotate freely in opposite direction.

4. Remove socket and re-install the shaft cap.
   The motor will operate in both directions.

To Engage the Backstop Feature - Repeat Steps 1 & 2:

3. Using a 10mm deep socket 1/4” drive and a ratchet; insert socket into the shaft and turn counter clockwise, approximately 15 turns.

   NOTE: Do not exert force to turn the socket as some movement for the drum may be necessary to align the shaft to engage to its mating part. Forcing the rotation of the socket may result in damage to internal components.

4. Once re-engaged, remove the socket and re-install the shaft cap.
   The motor will operate in only the direction indicated by the brass arrow mounted on the side of the unit.

If you require assistance, contact VDG (Van der Graaf) Technical Support:
1 (866) 595-3292 or email: service@vandergraaf.com

Oil Change Instructions

All drum motors are factory filled with oil that is free of detergent additives.

NOTE: Do not use oil additives which can cause damage to the motor insulation or seals. Electrically conductive-bases oils, such as graphite and molybdenum disulfide, should not be used, as they will result in electric motor insulation damage.

OIL CHANGE

1. Allow the drum motor to cool to normal temperature.

2. Rotate the drum motor until the oil plug is located in the 6 o'clock position.

3. Unscrew the oil plug and allow the oil to drain completely.
   Note: There may be internal pressure released when removing the oil plug, this is normal.

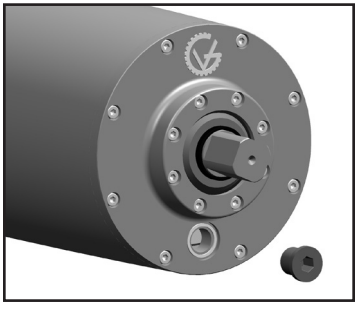

4. Refill the drum motor with the suggested oil type (page 11) and amount of oil (pages 12-13).

   To verify the oil level, rotate the drum motor until the oil plug is in the 4 o'clock position as shown in the diagram. The minimum oil level should be up to the level of the oil plug. For exact oil quantities consult VDG (Van der Graaf) Technical Support*.

   Note: typical levels are higher but should not exceed the level where the oil plug is in the 3 o'clock position.

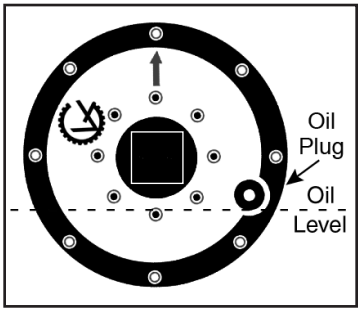

5. Re-install the oil plug and if available, install a new copper seal.

*VDG (Van der Graaf) Technical Support:
1 (866) 595-3292 or email: service@vandergraaf.com

Oil Type	
Manufacturer	**Oil Type**
Petro Canada	Enduratex EP 220 Gear Oil
Castrol	Molub-Alloy Gear Oil 90/220 or Alpha SP 220
Chevron	Meropa XL 220
Mobil / Esso / Imperial Oil	Spartan EP 220
Citgo	EP Compound 220
Gulf	EP Lubricant HD 220
Shell	Omala S2 G 220
Sunoco	SUNEP 220

Food Grade Oil Type	
Manufacturer	**Oil Type**
Petro Canada	Purity FG EP 100
Mobil/Exxon	Nuto FG 100

Clutch Brake Oil Type	
Manufacturer	**Oil Type**
Petro Canada	Duratran Transmission/ Hydraulic Fluid

Drum Motor Oil Content (in Litres)

Face Width (inches)	Drum Motor Oil Content (in Litres) per Face Width													
	Type of Drum Motor													
	TM 100B25	TM 113B25	TM 127.25	TM 160A25	TM 160.30	TM 215A30	TM 215.40	TM 273.40	TM 315A40	TM 315.50	TM 400A50	TM 400.60	TM 500A60	TM 500A75
9.84			0.4	1.45										
10.24	0.38	0.5												
10.83	0.4	0.5	0.5	1.6										
11.81			0.6	1.7										
12.20	0.45	0.6												
12.80			0.7	1.9										
13.78			0.8	2.0	1.45	4.6								
14.17	0.6	0.9												
15.75			1.0	2.35	1.7	5.7								
16.14	0.8	1.1												
16.73			1.1	2.5	1.75	6.3	2.7	6.5	15.0					
17.72			1.1	2.8	1.9	6.5	3.1	7.0	15.8					
18.11	0.9	1.3												
19.69			1.4	3.2	2.2	8.1	3.9	7.9	17.5	9.1	21.4			
20.08	1.1	1.5												
21.65			1.5	3.6	2.5	9.3	4.3	8.8	19.0	10.8	24.0			
22.05	1.3	1.8												
23.62			1.7	4.0	2.8	10.4	4.7	9.7	20.5	12.5	26.6	29.4	49.2	
24.02	1.5	2.1												
25.59			1.8	4.45	3.1	11.7	5.1	10.7	22.5	13.5	29.2	31.3	52.8	
25.98	1.6	2.3												
27.56			2.1	4.8	3.2	12.8	5.5	11.5	24.0	15.4	31.8	33.2	56.4	

Face Width (inches)	Drum Motor Oil Content (in Litres) per Face Width													
	Type of Drum Motor													
	TM 100B25	TM 113B25	TM 127.25	TM 160A25	TM 160.30	TM 215A30	TM 215.40	TM 273.40	TM 315A40	TM 315.50	TM 400A50	TM 400.60	TM 500A60	TM 500A75
27.95	1.8	2.5												
29.53			2.3	5.1	3.4	14.0	6.3	12.5	25.5	17.0	34.4	35.2	60.1	
29.92	1.8	2.6												
31.50			2.4	5.5	3.7	15.2	7.1	13.3	27.5	18.3	37.0	37.2	63.7	
31.89	2.1	2.9												
33.46			2.6	5.9	3.9	16.5	7.9	14.5	29.0	19.2	39.6	39.2	67.3	53.2
33.86	2.2	3.1												
35.43			2.9	6.3	4.1	17.6	8.7	15.2	30.5	20.8	42.2	41.1	70.9	56.5
35.83	2.5	3.5												
37.40			3.0	6.7	4.4	18.9	9.1	15.9	31.0	22.5	44.8	43.0	74.3	56.5
37.80	2.7	3.7												
39.37			3.2	7.1	4.6	20.0	9.5	16.6	32.5	23.4	47.5	45.0	78.3	58.7
39.76	2.9	4.1												
41.34			3.4	7.5	4.7	21.3	9.9	18.0	34.0	24.2	50.0	47.0	82.0	58.7
31.73	3.0	4.2												
43.31			3.6	7.9	4.8	22.0	10.3	18.7	35.5	25.0	52.7	48.0	85.6	60.9
43.70	3.1	4.4												
45.67	3.3	4.7												
Above 45.67" add	**0.03 L per inch**	**0.05 L per inch**	**0.075 L per inch**	**0.175 L per inch**	**0.15 L per inch**	**0.5 L per inch**	**0.3 L per inch**	**0.375 L per inch**	**0.8 L per inch**	**0.675 L per inch**	**1.3 L per inch**	**0.99 L per inch**	**1.8 L per inch**	**1.8 L per inch**

Example: TM160.30 Drum Motor with face width of 33.46 inches requires 3.9 litres of oil.

(1 Litres = 0.265 gallons; 100 mm = 3.94 inches)

The unit will not run	1. Check for correct connections. 2. Check for correct power supply voltage. 3. In a 3ϕ unit check for equal voltage in all 3 phases.
The unit runs hot	1. Make sure the unit is running with a belt. If the application does not require a belt be sure the motor is No Belt (NB) series. 2. Load not to exceed the capacity of the unit. 3. Check the current draw and make sure it is not higher than the rated current on the name plate.
The unit will hum, start but very slowly or not start at all	1. On 1ϕ units, check the capacitor and starting switch. 2. On 3ϕ units, check for equal voltage on all 3 legs or open phase in the winding.
The unit will trip off overload or fuses	1. Check the Drum Motor for a short to ground. 2. If no short to ground is present, apply the rated input voltage and with an ammeter, measure the current and ensure that there is a balance of +/-10% variance between all three phases.
The unit is noisy	1. Check the installation of the unit. 2. Make sure that the arrow on the shaft, opposite to the junction box, is pointing up. 3. Check for excess belt tension and relieve.

NOTE: If any of the above mentioned attempts to correct the problem have been performed and the problem persists, contact VDG (Van der Graaf):
Technical Support: 1 (866) 595-3292 Email: service@vandergraaf.com

VDG (Van der Graaf)

CANADA
2 Van der Graaf Court
Brampton, Ontario L6T 5R6

USA
Michigan
13771 Cavaliere Drive
Shelby Township, MI 48315

Service & Tech Center
50400 Sabrina Drive
Shelby Township, MI 48315

Tel: 1-888-326-1476
Fax: 1-888-326-0089
Technical Support: 1-866-595-3292
service@vandergraaf.com

e-mail: info@vandergraaf.com
www.vandergraaf.com

700 ENG (05/2026) ©*Van der Graaf Inc. All Rights Reserved.*